PRECISION INDEXING SOLUTIONS

Features and Benefits

The **CAMCO RDM Series** is a line of cam-operated rotary index drives, designed to move a wide array of products and components smoothly and with precision. Preloaded for no backlash, they have the capacity for handling high loads and speeds with controlled acceleration and deceleration for repeatable, accurate positioning.

- High precision, hardened cams available in standard and special motions
- Superior accuracy at the working radius when compared to a traditional indexer
- Sealed 4-point contact output bearing and large cam followers for superior accuracy and load capacity
- 60 Station capacity, ideal for multi-part automatic assembly machines
- Center through hole accommodates machine utilities
- Servo-driven solutions available for complex or variable indexing profiles
- Optional Output Overload Clutch available

Application Examples

Cycle on Demand Indexer with Fixed Number of Stations

- RDM indexer with user controlled variable dwell time
- Single index cycle with user controlled variable dwell time
- Index time is controlled by varying frequency setting of inverter drive
- 60 or 30 indexing cycles per minute using an AC or DC motor and drive respectively
- Increased productivity cycle rates with an Output Clutch-Brake option

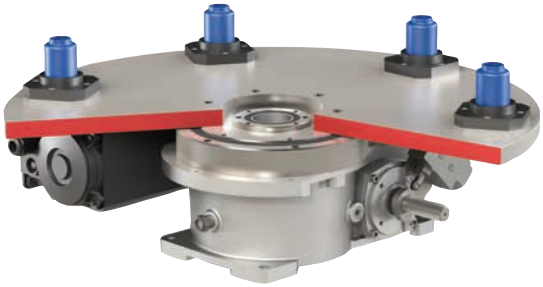

Cambot Flexible Pick and Place Solutions

- Servo driven indexer supporting high moment capacity payloads
- Large output flange for mounting a custom end-effector solution
- Integrate Destaco's versatile grippers, slides and vacuum products for pick and place actuation

Dimensions and technical information are subject to change without notice

CAMCO XPRESS PROGRAM

601RDM and 902RDM Series

Destaco continues to offer excellent service to our customers by providing the most common models of our **Camco RDM Series** as fast as you need them.

XPRESS 5DAY

Base Models

601RDM
Load Capacity:
Radial: **945 lbs**
Thrust/Axial: **2360 lbs**

902RDM
Load Capacity:
Radial: **3540 lbs**
Thrust/Axial: **7000 lbs**
with Standard Torque and Detector Plate Settings

Please contact your Destaco Camco Sales Team to learn more features of the RDM Series and details of the Xpress Program.

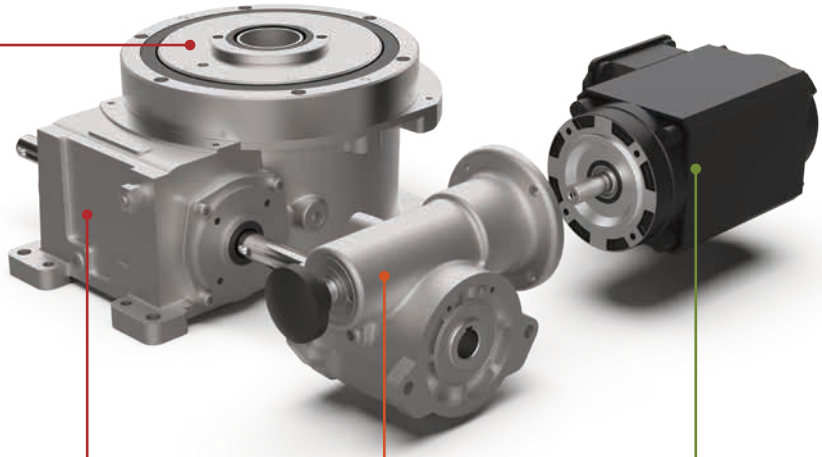

Stops

(M)601RDM: 2, 4, 6, 8, 12, 16

(M)902RDM: 2, 4, 6, 8, 12

Motion

270

330

Reducer

601RDM
R180 DE
R225 SE

902RDM
R225 SE

Ratio

10:1, 15:1, 20:1, 25:1, 30:1, 40:1, 50:1, 60:1

Motor

601RDM
W/0.33HP
230/460V
or 90/180V
DC Motor

902RDM
W/1HP, 56C
230/460V
or 90/180V
DC Motor

Optional Controller

Allen Bradley
PowerFlex 523 / 525
(Allen Bradley, PowerFlex are registered brands of Rockwell Automation)

Camco Vari-Pak

Clutch

(M)4.0D

(M)7.8D

RDM SERIES

Rotary Index Drive | How To Order

Base Model*

Imperial	Metric	Option Tables Page #
N/A	80RDM	5
601RDM	M601RDM	11
902RDM	M902RDM	17
N/A	1100RDM	23
1305RDM	M1305RDM	29
1800RDM	M1800RDM	35

*Right Hand Cam only

Index Mounting (See Figure 1)

1
2
3
4
5
6

Reducer/Motor (Table 1)

Note: Set Reducer Mounting option to 0 when Reducer/Motor option is 0000.

Reducer Mounting (See Figure 2)

0 = No Reducer

A	J
B	K
C	L
D	M
E	N
F	P
G	R
H	S

Cycling Sensor (See Figure 3) Description

0 = No Sensors

A	Single Cam w/PNP Prox
B	Single Cam w/NPN Prox
C	Dual Cam w/PNP Prox
D	Dual Cam w/NPN Prox
E	Single Cam/Prox Bracket
F	Dual Cam/Prox Bracket
G	Single Cam, w/Mech LS
H	Dual Cam, w/Mech LS

601RDM C 1 P - RM2E - 000 - C L - A 40EA - A02

Motion

	Description
A	2-Stop-330
B	3-Stop-330
C	4-Stop-270
D	4-Stop-330
E	6-Stop-270
F	6-Stop-330
G	8-Stop-270
H	8-Stop-330
I	12-Stop-270
J	12-Stop-330
K	16-Stop-270
L	16-Stop-330
M	8:1 Constant-Lead
N	12:1 Constant-Lead
P	16:1 Constant-Lead
R*	24:1 Constant-Lead

*Models 601, 902, 1100 only.

Center Post

	Code	Description
All Sizes	0	= No Reducer
	P	Center Post
902 1100 1305	T	Tool Plate Mounting Holes
	B	Center Post + Tool Plate Mounting Holes

No Center Post Options 0 and T

Center Post Options P and B

Motor Brake Settings (Table 2)

Reducer Gear Ratio (Table 3)

Output Clutch (Table 4)

Motor Control (Table 5)

Input Shaft Configuration/Rotation

Relative Rotation for Right Hand Cam:

Side 1: CW Input, CCW Output

Side 2: CCW input, CW Output

NOTE: Input can be driven in either direction. Reducer, Motor and adapter plates can be mounted on either side 1 or side 2 to drive input.

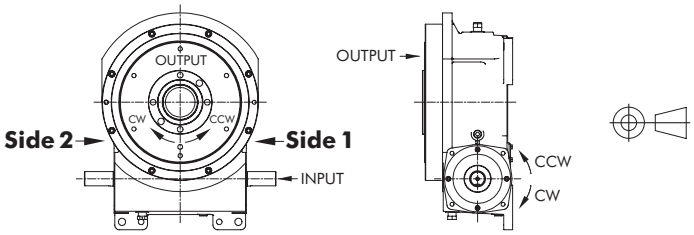

Index Mounting (Figure 1)

OVOI (output vertical, over input)	OVUI (output vertical, under input)	OHOI (output horizontal, over input)	OHUI (output horizontal, under input)	H-S1-UP (output horizontal, side 1 up)	H-S2-UP (output horizontal, side 2 up)
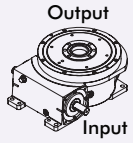 1	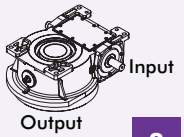 2	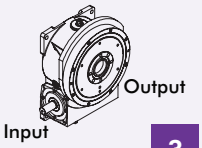 3	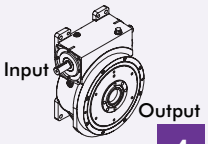 4	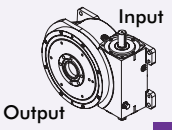 5	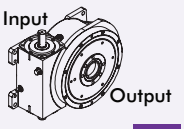 6

Other Motions (stops and index periods) available. Contact your DESTACO sales representative for more information.

Dimensions and technical information are subject to change without notice

Gear Reducer Mounting Positions (Figure 2)

	Mounting "A"		Mounting "B"	
	Right Hand	Left Hand	Right Hand	Left Hand
SIDE 1	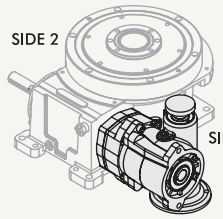 A	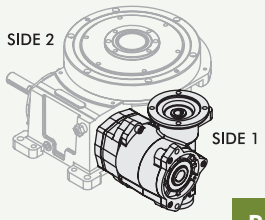 B	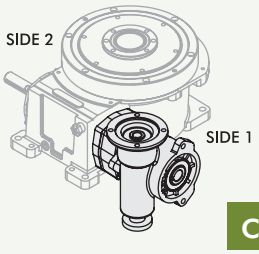 C	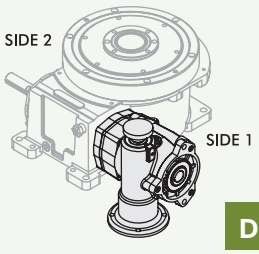 D
SIDE 2	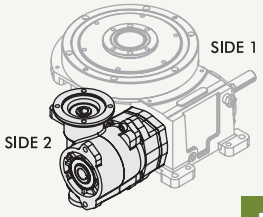 E	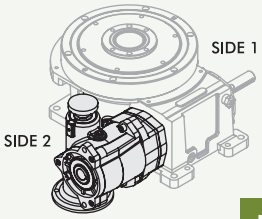 F	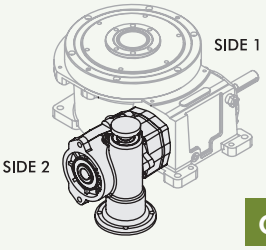 G	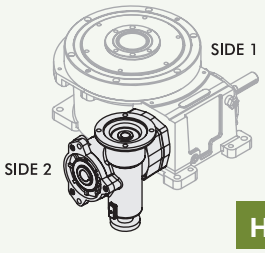 H

	Mounting "C"		Mounting "D"	
	Right Hand	Left Hand	Right Hand	Left Hand
SIDE 1	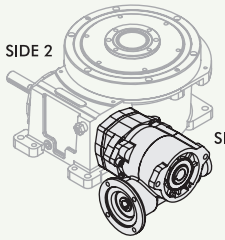 J	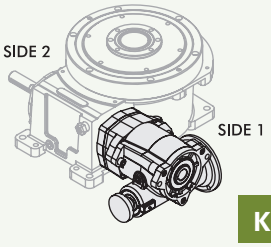 K	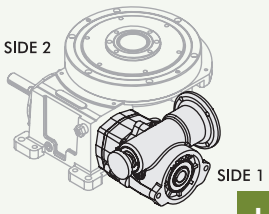 L	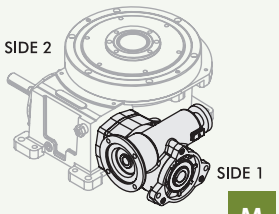 M
SIDE 2	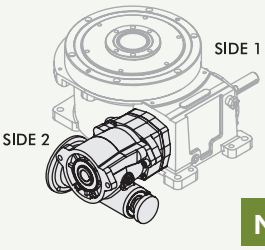 N	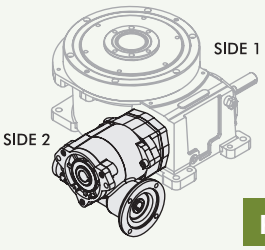 P	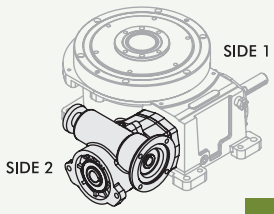 R	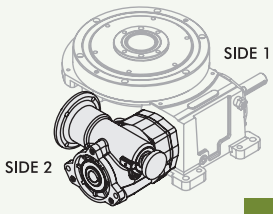 S

Cycling Sensor Options (Figure 3)

Single Cam with (A) PNP or (B) NPN Proximity Sensor	Dual Cam with (A) PNP or (B) NPN Proximity Sensor	Single Cam with Proximity Sensor Bracket	Dual Cam with Proximity Sensor Bracket	Single Cam with Mechanical Limit Switch	Dual Cam with Mechanical Limit Switch
A B	C D	E	F	G	H

80RDM SERIES

Rotary Index Drive | How To Order

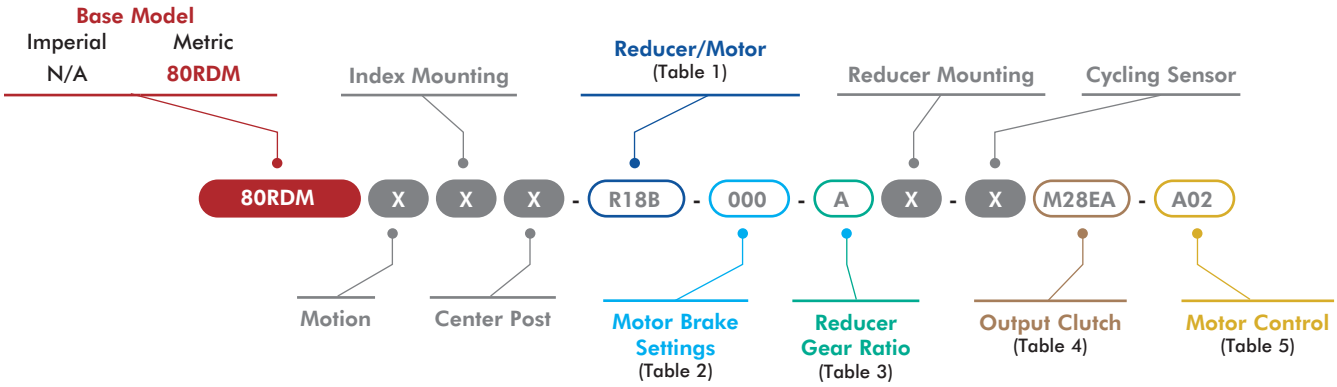

X = See Page 3 for option information.

1 Reducer/Motor Options

Code	Description
0000	No Reducer or Motor*
	R180 Motors
R18X	R180 Adapter only*
R18A	R180 Reducer
R18B	R180 Reducer with 0.33HP 230/460V AC Motor
R18C	R180 Reducer with 0.33HP 90V DC Motor
R18D	R180 Reducer with 0.33HP 180V DC Motor
	STM RMI-28/40 Motors
RM1A	RMI-28 Adapter only*
RM1B	STM RMI-28/LFB/IEC56-B14 Reducer
RM1C	STM RMI-28/LFB with 0.09kW Motor
RM2A	RMI-40 Adapter only*
RM2B	STM RMI-40/LFB/IEC63-B14 Reducer
RM2C	STM RMI-40/LFB/IEC71-B14 Reducer
RM2D	STM RMI-40/LFB with 0.18kW Motor
RM2E	STM RMI-40/LFB with 0.25kW Motor

*All Reducer/Motor adapters require Gear Ratio option to be 0.

2 Motor Brake

Code	Description
000	No Brake

3 Reducer Gear Ratios*

Code	Description	
	R180	STM RMI-28/40
0	N/A	N/A
A	10:1	10:1
B	15:1	15:1
C	20:1	20:1
D	25:1	28:1
E	30:1	40:1
F	40:1	49:1
G	50:1	56:1
H	60:1	70:1

*All Reducer/Motor adapters require Gear Ratio option to be 0.

Select Gear ratio column based on the reducer type selected.

4 Output Clutch & Settings

80RDM Metric Clutch Models

Code	Description
0000	No Output Overload Clutch
M28DA	M2.8D/54 Nm, Standard*
M28DB	M2.8D/96 Nm, Standard*
M28DC	M2.8D/147 Nm, Standard*
M28DD	M2.8D/249 Nm, Standard*
M28DE	M2.8D/350 Nm, Standard*
M28DF	M2.8D/45 Nm, Standard*
M28DG	M2.8D/79 Nm, Standard*
M28DH	M2.8D/124 Nm, Standard*
M28DJ	M2.8D/203 Nm, Standard*
M28DK	M2.8D/54 Nm, Thru-Hole
M28DL	M2.8D/96 Nm, Thru-Hole
M28DM	M2.8D/147 Nm, Thru-Hole
M28DN	M2.8D/249 Nm, Thru-Hole
M28DP	M2.8D/350 Nm, Thru-Hole
M28DQ	M2.8D/45 Nm, Thru-Hole
M28DR	M2.8D/79 Nm, Thru-Hole
M28DS	M2.8D/124 Nm, Thru-Hole
M28DT	M2.8D/203 Nm, Thru-Hole
M28EA	M2.8D/54 Nm, Standard, EZ*
M28EB	M2.8D/96 Nm, Standard, EZ*
M28EC	M2.8D/147 Nm, Standard, EZ*
M28ED	M2.8D/249 Nm, Standard, EZ*
M28EE	M2.8D/350 Nm, Standard, EZ*
M28EF	M2.8D/45 Nm, Standard, EZ*
M28EG	M2.8D/79 Nm, Standard, EZ*
M28EH	M2.8D/124 Nm, Standard, EZ*
M28EJ	M2.8D/203 Nm, Standard, EZ*
M28EK	M2.8D/54 Nm, Thru-Hole, EZ
M28EL	M2.8D/96 Nm, Thru-Hole, EZ
M28EM	M2.8D/147 Nm, Thru-Hole, EZ
M28EN	M2.8D/249 Nm, Thru-Hole, EZ
M28EP	M2.8D/350 Nm, Thru-Hole, EZ
M28EQ	M2.8D/45 Nm, Thru-Hole, EZ
M28ER	M2.8D/79 Nm, Thru-Hole, EZ
M28ES	M2.8D/124 Nm, Thru-Hole, EZ
M28ET	M2.8D/203 Nm, Thru-Hole, EZ

*Cannot be used with center post option P

5 Motor Control

Code	Description	
000	NO MOTOR CONTROL	
A01	(AC) PowerFlex 523 1HP	120V 1Ph
A02		240V 1Ph
A03		480V 3Ph
A04	(AC) PowerFlex 525 1HP	120V 1Ph
A05		240V 1Ph
A06		480V 3Ph
D01	(DC) Varipak 1HP 90VDC	Uni-Directional
D02		Bi-Directional
D03	(DC) Varipak 2HP 180VDC	Uni-Directional
D04		Bi-Directional

Dimensions and technical information are subject to change without notice

Maximum Inertia x 1000 kg-cm² [lb-in²] for standard package							
Stops	Motion Time [seconds]						
	0.458	0.611	0.764	0.917	1.222	1.528	1.833
2	0 [0]	3 [1]	6 [2]	15 [5]	29 [10]	47 [16]	67 [23]
3	3 [1]	9 [3]	20 [7]	32 [11]	61 [21]	94 [32]	138 [47]
4	6 [2]	18 [6]	38 [13]	67 [23]	135[46]	217 [74]	304 [104]
6	15 [5]	38 [13]	82 [28]	126 [43]	246 [84]	401 [137]	559 [191]
8	20 [7]	44 [15]	73 [25]	114 [39]	222 [76]	372 [127]	559 [191]
12	50 [17]	99 [34]	167 [57]	258 [88]	497 [170]	559 [191]	559 [191]
16	47 [16]	91 [31]	152 [52]	231 [79]	448 [153]	559 [191]	559 [191]
Reducer Ratio							
	15	20	25	30	40	50	60

Contact your DESTACO sales representative for more information.

Features

- R180 Reducer (Ratios from 15:1 to 60:1)
  - Double Extended Worm Shaft (Input)
  - Worm Shaft Handwheel
- Double Extended Camshaft (Input Shaft)
- Center Thru Hole (Ø70 mm [Ø2.76 in.])
- 1/3 HP AC Drive Package with Inverter Duty Motor and IM-pAC AC Drive (up to 60 cpm)
- Cycle Cam and Limit Switch Mounted to Camshaft
- Right Hand Cam
- Universal Mounting Capability

Output Load Capacity (loads carried during index):

Radial	3358 N [755 lbs]
Thrust/Axial	8385 N [1885 lbs]
Moment	213 N-m [1885 in-lb]

Typical Application Dial Diameter:	203 mm [8 in] to 711 mm [28 in]
Accuracy	±44 arcsec / ±0,08 mm [±.003in] at 355,6 mm [14in] Radius
Repeatability	±11 arcsec / ±0,018 mm [±.0007in] at 355,6 mm [14in] Radius

Optional Accessories

- 1/3 HP DC Motor
- Varipak DC Motor Control (up to 30 cpm)
- Output Mechanical Overload Clutch
  - See Page 9
- EZ Mount Dial Adapter
- Stationary Center Post
- Dual Cam and Limit Switch
- Electric Clutch-Brake
- Left Hand Cam

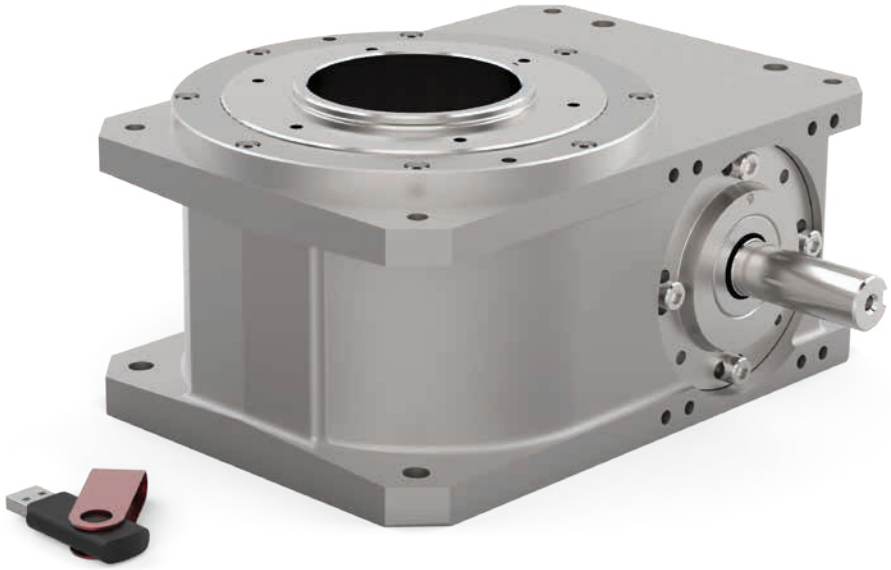

80RDM SERIES

Rotary Index Drive | Dimensions

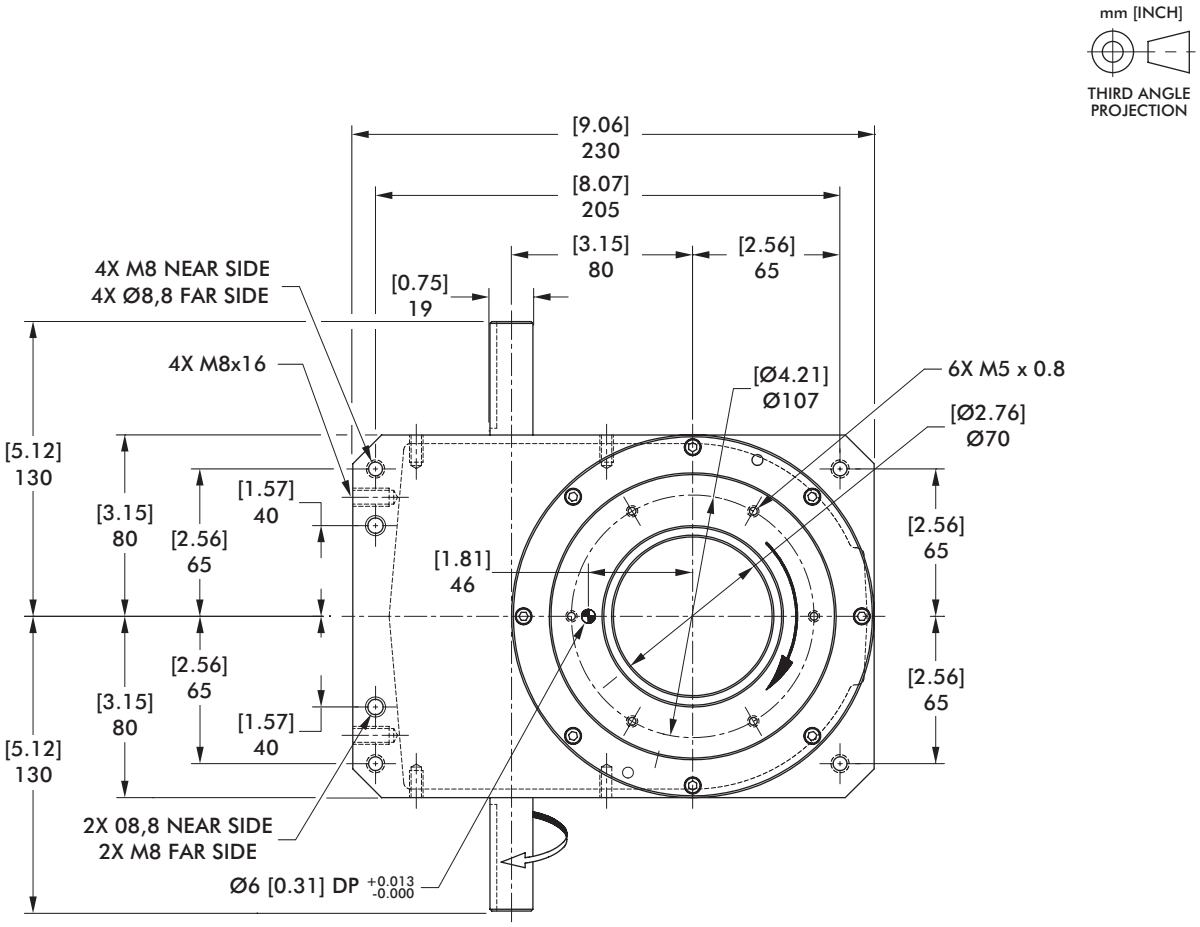

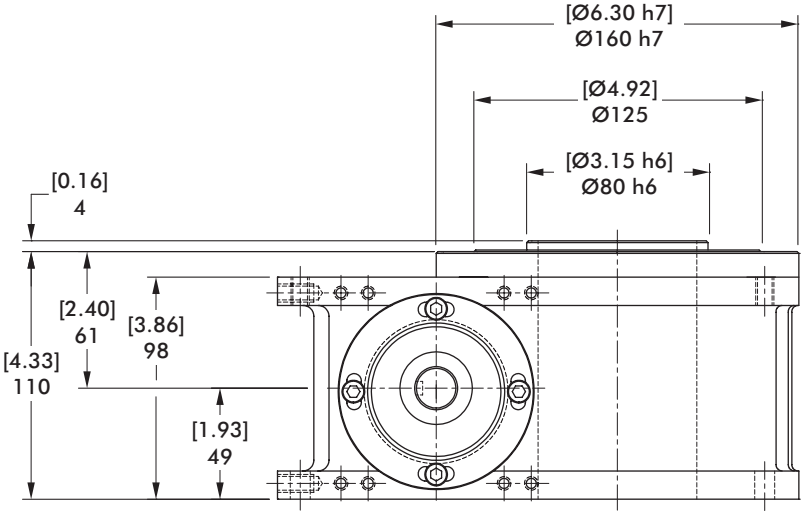

Dimensions and technical information are subject to change without notice

Proximity Switch

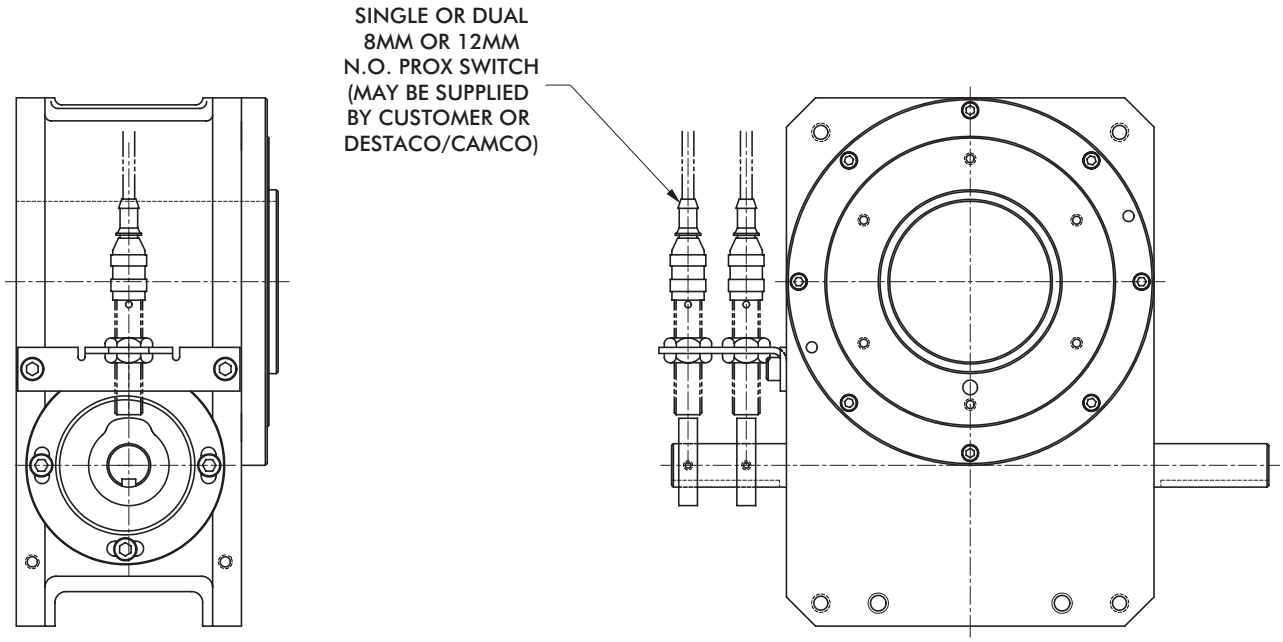

mm [INCH]

THIRD ANGLE PROJECTION

Center Post

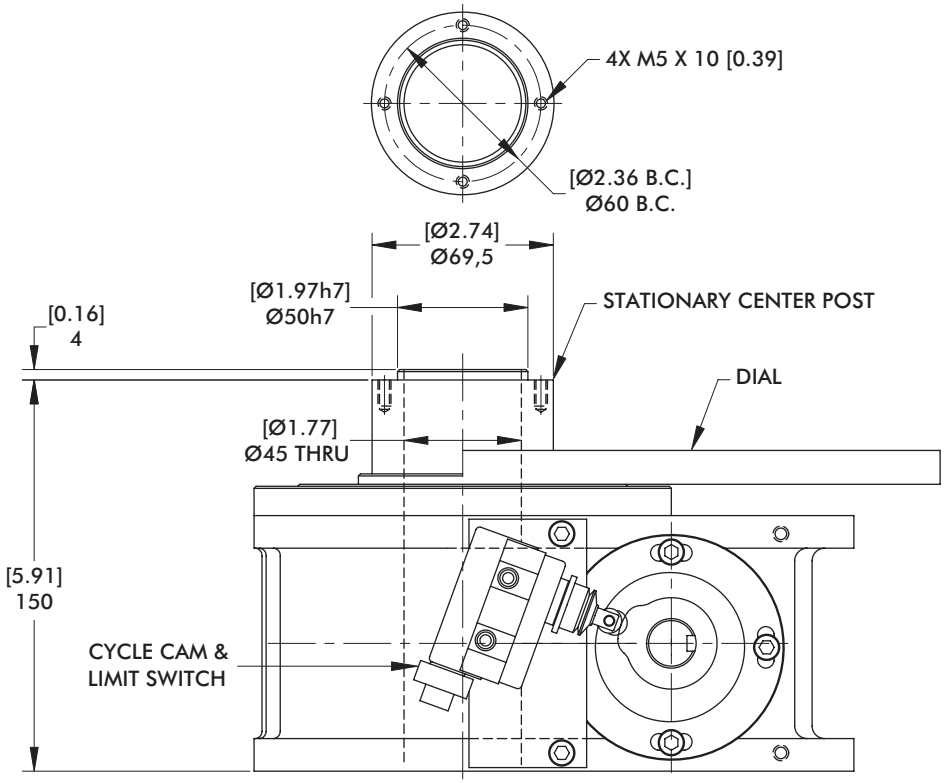

80RDM SERIES

Rotary Index Drive | Dimensions

2.8D Overload Clutch

THRU-HOLE CLUTCH

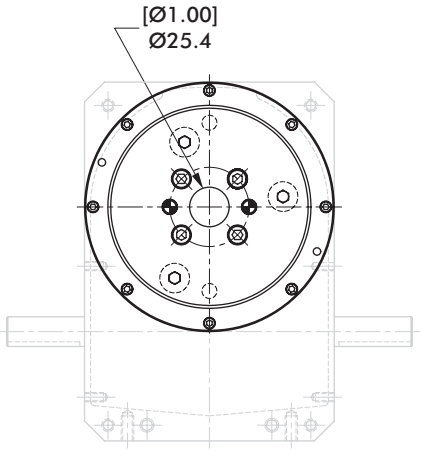

STANDARD CLUTCH

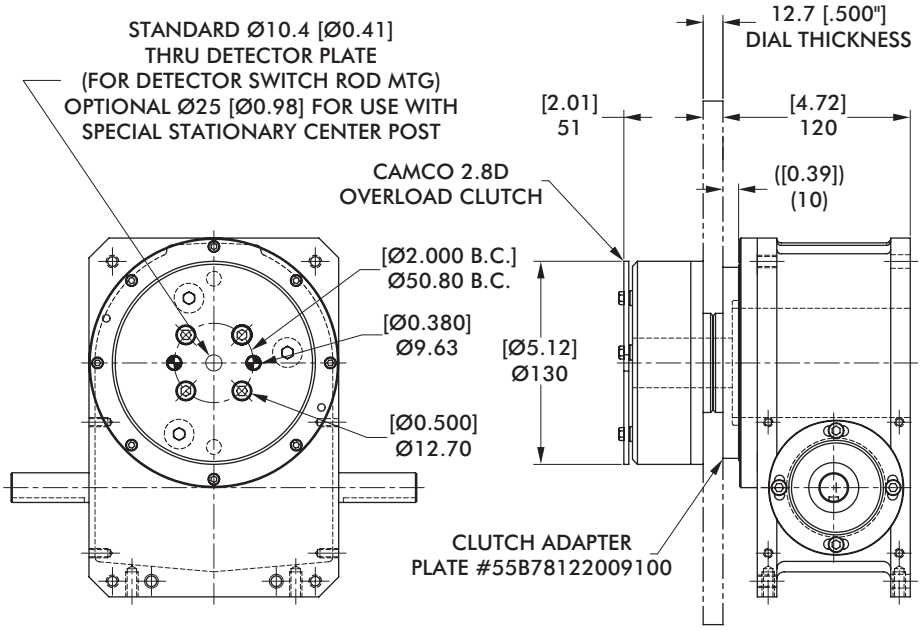

mm [INCH]

THIRD ANGLE PROJECTION

2.8D Overload Clutch with EZ Dial Mounting Adapter

THRU-HOLE EZ CLUTCH

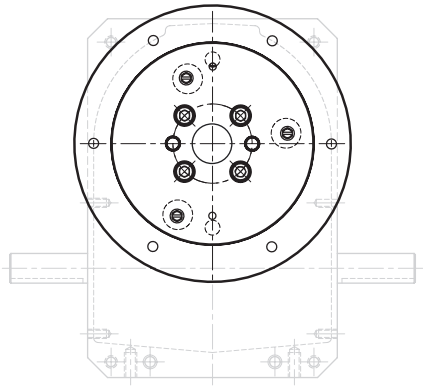

STANDARD EZ CLUTCH

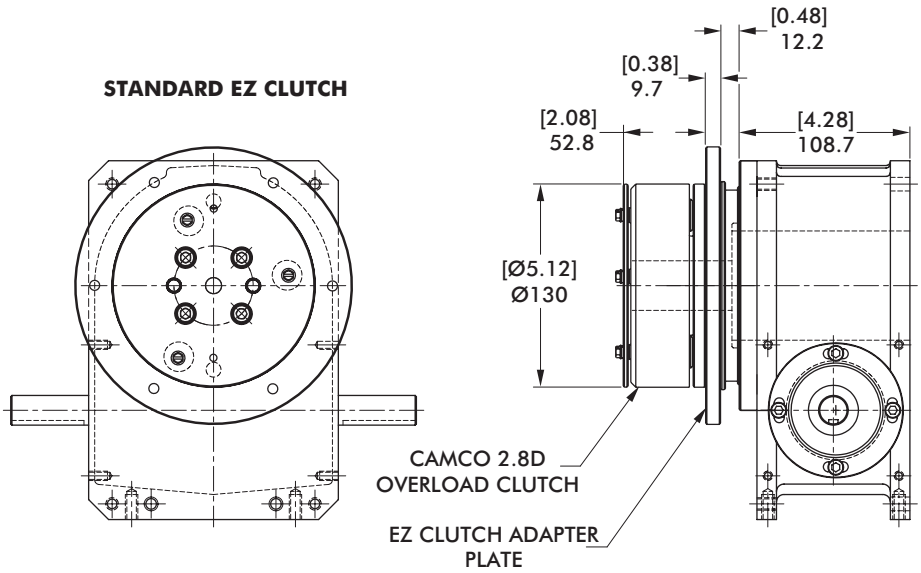

Model	Internal Inertia kg-m² [lb-in²]	Torque Setting N-m [in-lb]
2.8D	0,0085 [29]	45, 54, 79, 96, 124, 147, 203, 249, 350 [400, 480, 700, 850, 1100, 1300, 1800, 2200, 3100]

Dimensions and technical information are subject to change without notice

Notes

601RDM SERIES

Rotary Index Drive | How To Order

Base Model
Imperial: 601RDM
Metric: M601RDM

601RDM X X X - R2SF - 000 - B X - X 40DA - A02

- Index Mounting
- Reducer/Motor (Table 1)
- Reducer Mounting
- Cycling Sensor
- Motion
- Center Post
- Motor Brake Settings (Table 2)
- Reducer Gear Ratio (Table 3)
- Output Clutch (Table 4)
- Motor Control (Table 5)

X = See Page 3 for option information.

1 Reducer/Motor Options

Code	Description
0000	No Reducer or Motor*
	R180/R225 Motors
R18X	R180 Adapter only*
R18A	R180 Reducer
R18B	R180 Reducer with 0.33HP 230/460V AC Motor
R18C	R180 Reducer with 0.33HP 90V DC Motor
R18D	R180 Reducer with 0.33HP 180V DC Motor
R2XX	R225 Adapter only*
R2SA	R225 Reducer 56 ADAPTER & CPLG, Single Extended Worm
R2SB	R225 Reducer 145TC ADAPTER & CPLG, Single Extended Worm (No Motor)
R2SC	R225 Reducer with 0.5HP 56C 230/460V AC Motor, Single Extended Worm
R2SD	R225 Reducer with 1.0HP 56C 230/460V AC Motor, Single Extended Worm
R2SE	R225 Reducer with 1.0HP 56C 90V DC Motor, Single Extended Worm
R2SF	R225 Reducer with 1.0HP 56C 180V DC Motor, Single Extended Worm
R2DA	R225 Reducer 56 ADAPTER & CPLG, Double Extended Worm
R2DB	R225 Reducer 145TC ADAPTER & CPLG, Double Extended Worm (No Motor)
R2DC	R225 Reducer with 0.5HP 56C 230/460V AC Motor, Double Extended Worm
R2DD	R225 Reducer with 1.0HP 56C 230/460V AC Motor, Double Extended Worm
R2DE	R225 Reducer with 1.0HP 56C 90V DC Motor, Double Extended Worm
R2DF	R225 Reducer with 1.0HP 56C 180V DC Motor, Double Extended Worm
	SEW KH37 Motors
SW1A	KH37 Adapter only*
SW1B	SEW KH37DRS71S4 0.25Kw Motor (60Hz, 230/460V)
SW1C	SEW KH37DRS71S4 0.25Kw Motor (50Hz, 400V)
SW1D	SEW KH37DRS71S4 0.25Kw Motor (60Hz, 575V)
SW1E	SEW KH37DRS71S4 0.37Kw Motor (60Hz, 230/460V)
SW1F	SEW KH37DRS71S4 0.37Kw Motor (50Hz, 400V)
SW1G	SEW KH37DRS71S4 0.37Kw Motor (60Hz, 575V)
	STM RMI-40/50 Motors
RM2A	STM RMI-40 Adapter only*
RM2B	STM RMI-40 IEC63-B14 Reducer
RM2C	STM RMI-40 IEC71-B14 Reducer
RM2D	STM RMI-40 Reducer w/ 0.18kW Motor
RM2E	STM RMI-40 Reducer w/ 0.25kW Motor
RM3A	STM RMI-50 Adapter only*
RM3B	STM RMI-50 IEC71-B14 Reducer
RM3C	STM RMI-50 IEC80-B14 Reducer
RM3D	STM RMI-50 Reducer w/ 0.37kW Motor
RM3E	STM RMI-50 Reducer w/ 0.55kW Motor

*All Reducer/Motor adapters require Gear Ratio option to be 0.

2 Motor Brake*

Code	Description
000	No Brake
S1A	1.69 Nm (BE05)
S1B	2.49 Nm (BE05)
S1C	3.50 Nm (BE05)
S2A	4.97 Nm (BE1)
S2B	7.01 Nm (BE1)
S2C	9.94 Nm (BE1)

*SEW Motor brake setting options only. All other motors use option code 000.

3 Reducer Gear Ratios*

Code	Description		
	R180/225	SEW KH37	STM RMI-40/50
0	N/A	N/A	N/A
A	10:1	10.49:1	10:1
B	15:1	15.31:1	15:1
C	20:1	20.19:1	20:1
D	25:1	29.96:1	28:1
E	30:1	37.97:1	40:1
F	40:1	49.79:1	49:1
G	50:1	58.60:1	56:1
H	60:1	67.80:1	70:1

*All Reducer/Motor adapters require Gear Ratio option to be 0.

Select Gear ratio column based on the reducer type selected.

4 Output Clutch & Settings

601RDM Imperial Clutch Models

Code	Description
0000	No Output Overload Clutch
40DA	4.0D/420 in-lb, Standard*
40DB	4.0D/620 in-lb, Standard*
40DC	4.0D/750 in-lb, Standard*
40DD	4.0D/1150 in-lb, Standard*
40DE	4.0D/1750 in-lb, Standard*
40DF	4.0D/2950 in-lb, Standard*
40DG	4.0D/4000 in-lb, Standard*
40DH	4.0D/420 in-lb, Thru-Hole
40DJ	4.0D/620 in-lb, Thru-Hole
40DK	4.0D/750 in-lb, Thru-Hole
40DL	4.0D/1150 in-lb, Thru-Hole
40DM	4.0D/1750 in-lb, Thru-Hole
40DN	4.0D/2950 in-lb, Thru-Hole
40DP	4.0D/4000 in-lb, Thru-Hole
40EA	4.0D/420 in-lb, Standard, EZ*
40EB	4.0D/620 in-lb, Standard, EZ*
40EC	4.0D/750 in-lb, Standard, EZ*
40ED	4.0D/1150 in-lb, Standard, EZ*
40EE	4.0D/1750 in-lb, Standard, EZ*
40EF	4.0D/2950 in-lb, Standard, EZ*
40EG	4.0D/4000 in-lb, Standard, EZ*
40EH	4.0D/420 in-lb, Thru-Hole, EZ
40EJ	4.0D/620 in-lb, Thru-Hole, EZ
40EK	4.0D/750 in-lb, Thru-Hole, EZ
40EL	4.0D/1150 in-lb, Thru-Hole, EZ
40EM	4.0D/1750 in-lb, Thru-Hole, EZ
40EN	4.0D/2950 in-lb, Thru-Hole, EZ
40EP	4.0D/4000 in-lb, Thru-Hole, EZ

M601RDM Metric Clutch Models

Code	Description
0000	No Output Overload Clutch
M40DA	M4.0D/47 Nm, Standard*
M40DB	M4.0D/70 Nm, Standard*
M40DC	M4.0D/85 Nm, Standard*
M40DD	M4.0D/130 Nm, Standard*
M40DE	M4.0D/198 Nm, Standard*
M40DF	M4.0D/333 Nm, Standard*
M40DG	M4.0D/452 Nm, Standard*
M40DH	M4.0D/47 Nm, Thru-Hole
M40DJ	M4.0D/70 Nm, Thru-Hole
M40DK	M4.0D/85 Nm, Thru-Hole
M40DL	M4.0D/130 Nm, Thru-Hole
M40DM	M4.0D/198 Nm, Thru-Hole
M40DN	M4.0D/333 Nm, Thru-Hole
M40DP	M4.0D/452 Nm, Thru-Hole
M40EA	M4.0D/47 Nm, Standard, EZ*
M40EB	M4.0D/70 Nm, Standard, EZ*
M40EC	M4.0D/85 Nm, Standard, EZ*
M40ED	M4.0D/130 Nm, Standard, EZ*
M40EE	M4.0D/198 Nm, Standard, EZ*
M40EF	M4.0D/333 Nm, Standard, EZ*
M40EG	M4.0D/452 Nm, Standard, EZ*
M40EH	M4.0D/47 Nm, Thru-Hole, EZ
M40EJ	M4.0D/70 Nm, Thru-Hole, EZ
M40EK	M4.0D/85 Nm, Thru-Hole, EZ
M40EL	M4.0D/130 Nm, Thru-Hole, EZ
M40EM	M4.0D/198 Nm, Thru-Hole, EZ
M40EN	M4.0D/333 Nm, Thru-Hole, EZ
M40EP	M4.0D/452 Nm, Thru-Hole, EZ

*Cannot be used with center post option P.

5 Motor Control

Code	Description	
000	NO MOTOR CONTROL	
A01	(AC) PowerFlex 523 1HP	120V 1Ph
A02		240V 1Ph
A03		480V 3Ph
A04	(AC) PowerFlex 525 1HP	120V 1Ph
A05		240V 1Ph
A06		480V 3Ph
A07	(AC) PowerFlex 523 2HP	240V 3Ph
A08		480V 3Ph
A09	(AC) PowerFlex 525 2HP	240V 3Ph
A10		480V 3Ph
D01	(DC) Varipak 1HP 90VDC	Uni-Directional
D02		Bi-Directional
D03	(DC) Varipak 2HP 180VDC	Uni-Directional
D04		Bi-Directional

Dimensions and technical information are subject to change without notice

Maximum Inertia x 1000 kg-cm² [lb-in²] for standard package							
Stops	Motion Time [seconds]						
	0.458	0.611	0.764	0.917	1.222	1.528	1.833
2	0 [0]	3 [1]	6 [2]	15 [5]	32 [11]	50 [17]	70 [24]
3	3 [1]	9 [3]	20 [7]	35 [12]	82 [28]	123 [42]	170 [58]
4	6 [2]	18 [6]	38 [13]	67 [23]	152 [52]	228 [78]	310 [106]
6	15 [5]	41 [14]	82 [28]	149 [51]	328 [112]	492 [168]	667 [228]
8	29 [10]	73 [25]	149 [51]	263 [90]	582 [199]	875 [299]	1188 [406]
12	64 [22]	167 [57]	337 [115]	597 [204]	1314 [449]	1399 [478]	1399 [478]
16	117 [40]	296 [101]	600 [205]	1056 [361]	1399 [478]	1399 [478]	1399 [478]
Reducer Ratio							
	15	20	25	30	40	50	60

Other Motions (stops and index periods) available. Contact your DESTACO sales representative for more information.

Features

- R180 Reducer (Ratios from 15:1 to 60:1)
  - Double Extended Worm Shaft (Input)
  - Worm Shaft Handwheel
- Double Extended Camshaft (Input Shaft)
- Center Thru Hole (Ø44,45 [Ø1.75 in.])
- 1/3 HP AC Drive Package with Inverter Duty Motor and IM-pAC AC Drive (up to 60 cpm)
- Cycle Cam and Limit Switch Mounted to Camshaft
- Right Hand Cam

Output Load Capacity (loads carried during index):

Radial	4204 N [945 lbs]
Thrust/Axial	10498 N [2360 lbs]
Moment	373 N-m [3305 in-lb]

Typical Application Dial Diameter:	305 mm [12 in] to 914 mm [36 in]
Accuracy	±39 arcsec / ±0,08 mm [±.003in] at 457,2 mm [18in] Radius
Repeatability	±10 arcsec / ±0,023 mm [±.0009in] at 457,2 mm [18in] Radius

Optional Accessories

- 1/3 hp DC Motor
- Varipak DC Motor Control (up to 30 cpm)
- Output Mechanical Overload Clutch
  - See Page 15
- EZ Mount Dial Adapter
- Stationary Center Post
- Dual Cam and Limit Switch
- Relief in Dwell for shot-pin applications
- Left Hand Cam

601RDM SERIES

Rotary Index Drive | Dimensions

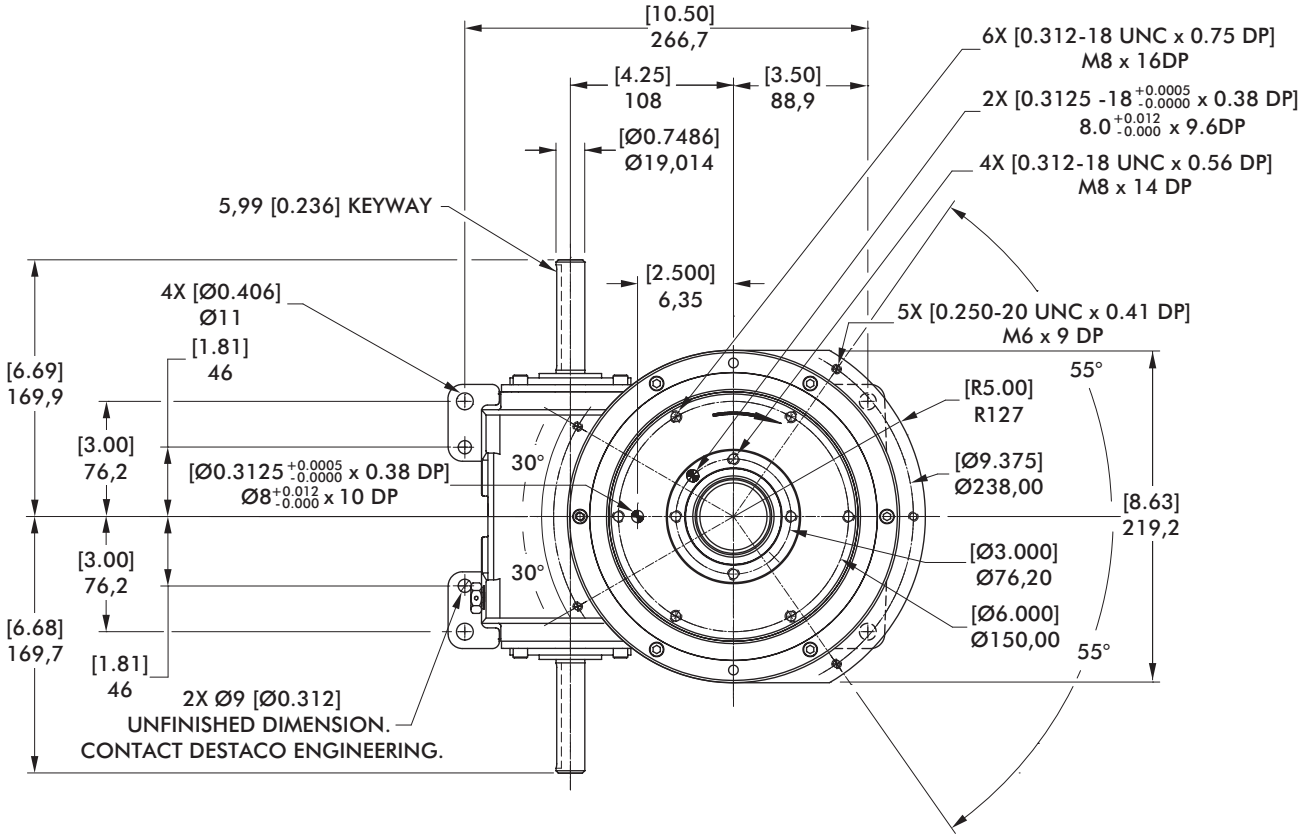

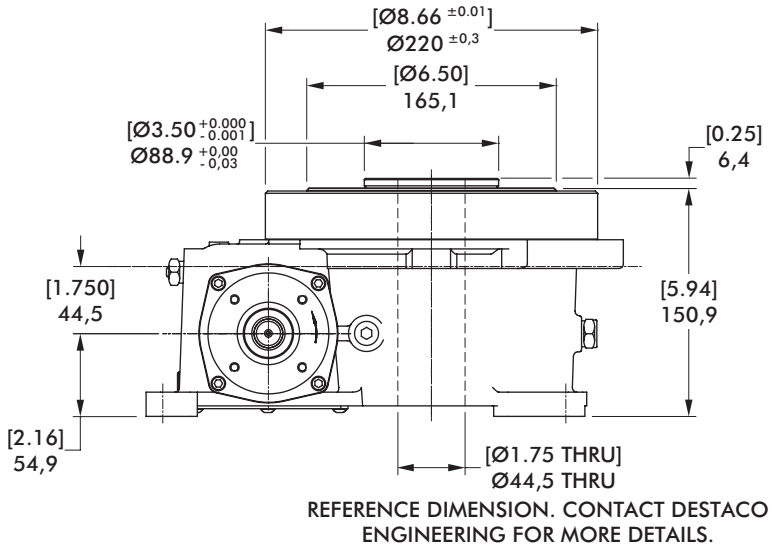

mm [INCH]

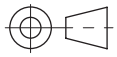

THIRD ANGLE
PROJECTION

Proximity Switch

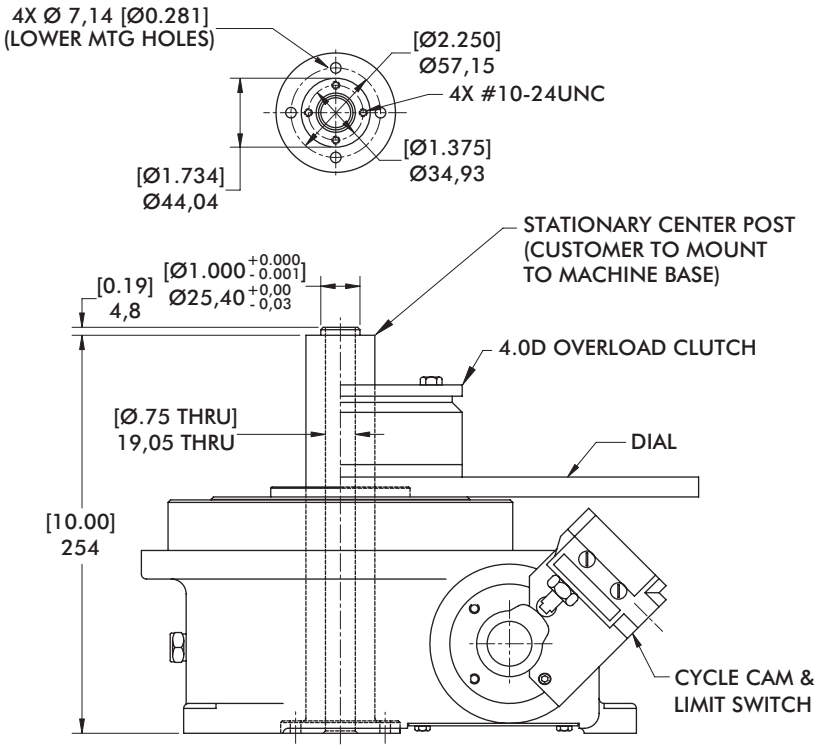

mm [INCH]

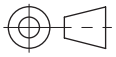

THIRD ANGLE
PROJECTION

Center Post

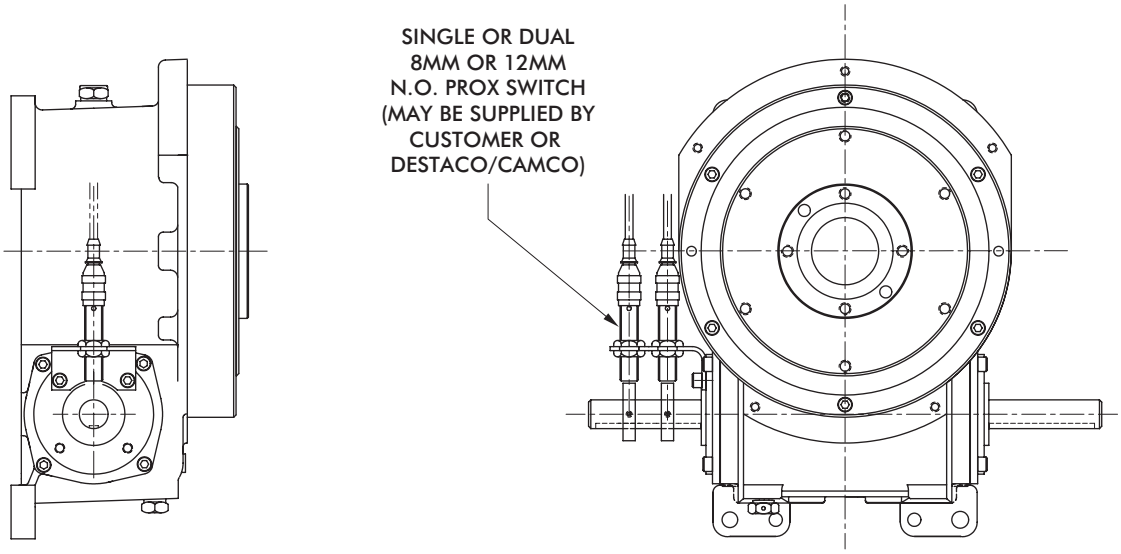

601RDM SERIES

Rotary Index Drive | Dimensions

4.0D Overload Clutch

THRU-HOLE CLUTCH

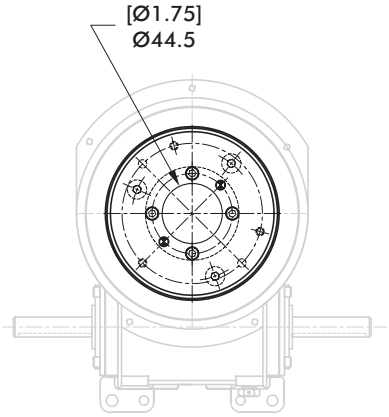

STANDARD CLUTCH

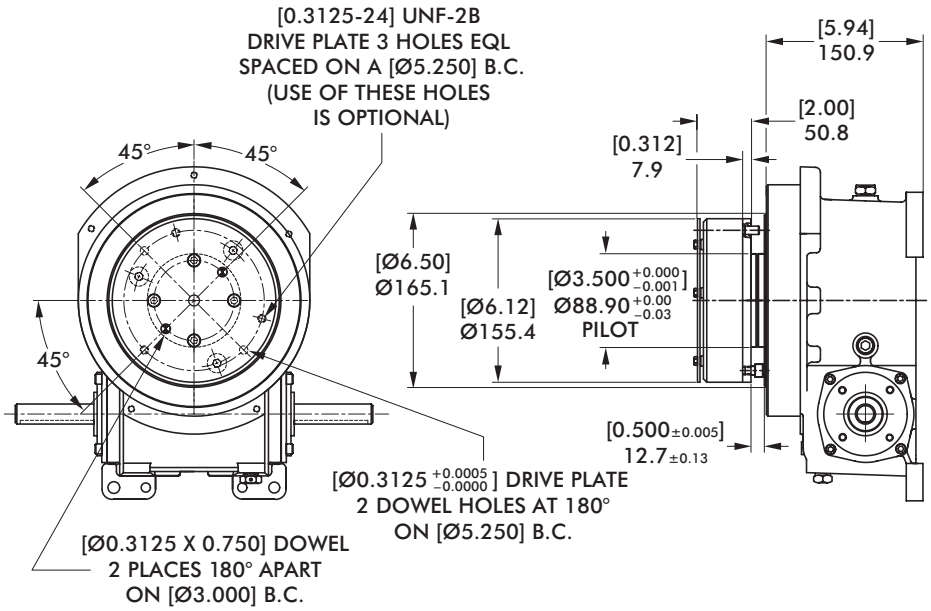

mm [INCH]

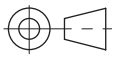

THIRD ANGLE PROJECTION

4.0D Overload Clutch with EZ Dial Mounting Adapter

THRU-HOLE EZ CLUTCH

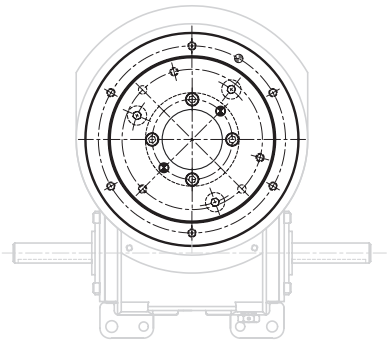

STANDARD EZ CLUTCH

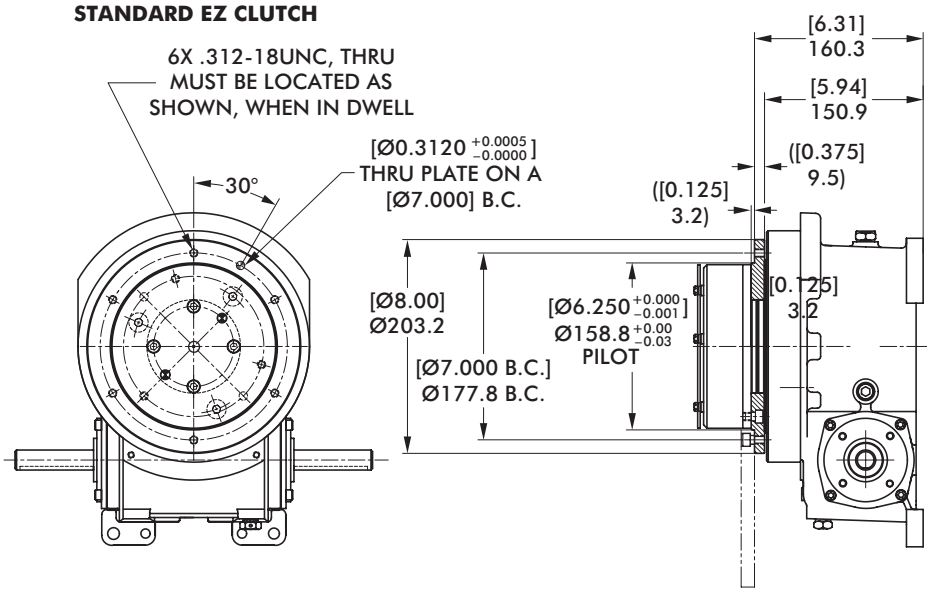

Model	Internal Inertia kg-m² [lb-in²]	Torque Setting N-m [in-lb]
4.0D	0,0202 [69]	47, 70, 85, 130, 198, 333, 452 [420, 620, 750, 1150, 1750, 2950, 4000]

Dimensions and technical information are subject to change without notice

Notes

902RDM SERIES

Rotary Index Drive | How To Order

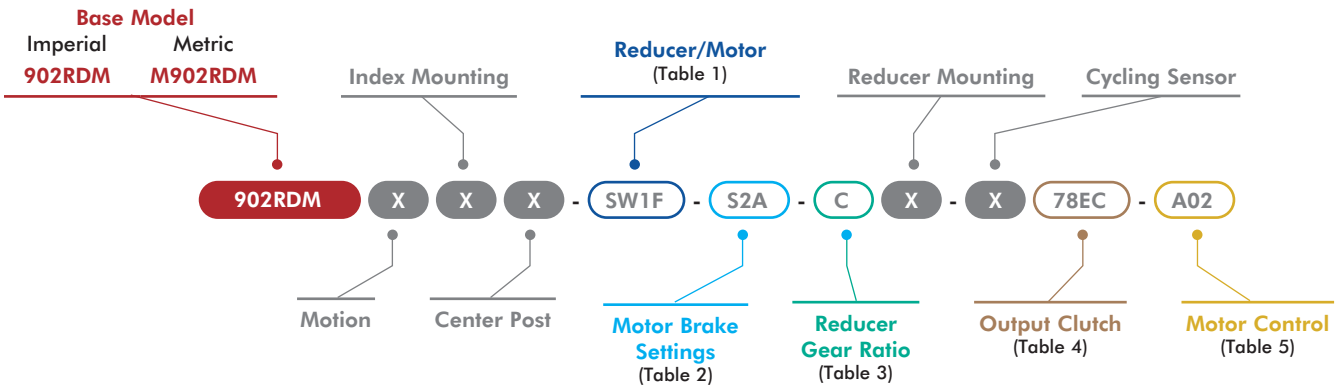

X = See Page 3 for option information.

1 Reducer/Motor Options

Code	Description
0000	No Reducer or Motor*
	R225 Motors
R2XX	R225 Adapter only*
R2SA	R225 Reducer 56 ADAPTER & CPLG, Single Extended Worm
R2SB	R225 Reducer 145TC ADAPTER & CPLG, Single Extended Worm (No Motor)
R2SC	R225 Reducer with 0.5HP 56C 230/460V AC Motor, Single Extended Worm
R2SD	R225 Reducer with 1.0HP 56C 230/460V AC Motor, Single Extended Worm
R2SE	R225 Reducer with 1.0HP 56C 90V DC Motor, Single Extended Worm
R2SF	R225 Reducer with 1.0HP 56C 180V DC Motor, Single Extended Worm
R2DA	R225 Reducer 56 ADAPTER & CPLG, Double Extended Worm
R2DB	R225 Reducer 145TC ADAPTER & CPLG, Double Extended Worm (No Motor)
R2DC	R225 Reducer with 0.5HP 56C 230/460V AC Motor, Double Extended Worm
R2DD	R225 Reducer with 1.0HP 56C 230/460V AC Motor, Double Extended Worm
R2DE	R225 Reducer with 1.0HP 56C 90V DC Motor, Double Extended Worm
R2DF	R225 Reducer with 1.0HP 56C 180V DC Motor, Double Extended Worm
	SEW KH37 Motors
SW1E	KH37 Adapter only*
SW1F	SEW KH37DRN80M4/.75Kw Motor/Brake Motor (60Hz, 230/460V)
SW1G	SEW KH37DRN80M4/.75Kw Motor/Brake Motor (50Hz, 400V)
SW1H	SEW KH37DRN80M4/.75Kw Motor/Brake Motor (60Hz, 575V)
SW1J	SEW KH37DRN90L4/1.5Kw Motor/Brake Motor (60Hz, 230/460V)
SW1K	SEW KH37DRN90L4/1.5Kw Motor/Brake Motor (50Hz, 400V)
SW1L	SEW KH37DRN90L4/1.5Kw Motor/Brake Motor (60Hz, 575V)
	STM RMI-63/70 Motors
RM4A	STM RMI-63 Adapter only*
RM4B	STM RMI-63 IEC80-B14 Reducer
RM4C	STM RMI-63 IEC90-B14 Reducer
RM4D	STM RMI-63 Reducer with .75kW Motor
RM4E	STM RMI-63 Reducer with 1.5kW Motor
RM5A	STM RMI-70 Adapter only*
RM5B	STM RMI-70 IEC80-B14 Reducer
RM5C	STM RMI-70 IEC90-B14 Reducer
RM5D	STM RMI-70 Reducer with .75kW Motor
RM5E	STM RMI-70 Reducer with 1.5kW Motor

*All Reducer/Motor adapters require Gear Ratio option to be 0.

2 Motor Brake*

Code	Description
000	No Brake
S1A	1.69 Nm (BE05)
S1B	2.49 Nm (BE05)
S1C	3.50 Nm (BE05)
S2A	4.97 Nm (BE1)
S2B	7.01 Nm (BE1)
S2C	9.94 Nm (BE1)
S3A	9.94 Nm (BE2)
S3B	14.01 Nm (BE2)
S3C	20.00 Nm (BE2)

*SEW Motor brake setting options only. All other motors use option code 000.

3 Reducer Gear Ratios*

Code	Description		
	R225	SEW KH37	STM RMI-63/70
0	N/A	N/A	N/A
A	10:1	10.49:1	10:1
B	15:1	15.31:1	15:1
C	20:1	20.19:1	20:1
D	25:1	29.96:1	28:1
E	30:1	37.97:1	40:1
F	40:1	49.79:1	49:1
G	50:1	58.60:1	56:1
H	60:1	67.80:1	70:1

*All Reducer/Motor adapters require Gear Ratio option to be 0.

Select Gear ratio column based on the reducer type selected.

4 Output Clutch & Settings

902RDM Imperial Clutch Models		M902RDM Metric Clutch Models	
Code	Description	Code	Description
0000	No Output Overload Clutch	0000	No Output Overload Clutch
78DA	7.8D/3200 in-lb, Standard*	M78DA	M7.8D/360 Nm, Standard*
78DB	7.8D/7200 in-lb, Standard*	M78DB	M7.8D/815 Nm, Standard*
78DC	7.8D/10000 in-lb, Standard*	M78DC	M7.8D/1130 Nm, Standard*
78DD	7.8D/1400 in-lb, Standard*	M78DD	M7.8D/160 Nm, Standard*
78DE	7.8D/1700 in-lb, Standard*	M78DE	M7.8D/192 Nm, Standard*
78DF	7.8D/2600 in-lb, Standard*	M78DF	M7.8D/295 Nm, Standard*
78DG	7.8D/4200 in-lb, Standard*	M78DG	M7.8D/475 Nm, Standard*
78DH	7.8D/5000 in-lb, Standard*	M78DH	M7.8D/566 Nm, Standard*
78DJ	7.8D/3200 in-lb, Thru-Hole	M78DJ	M7.8D/360 Nm, Thru-Hole
78DK	7.8D/7200 in-lb, Thru-Hole	M78DK	M7.8D/815 Nm, Thru-Hole
78DC	7.8D/10000 in-lb, Thru-Hole	M78DC	M7.8D/1130 Nm, Thru-Hole
78DM	7.8D/1400 in-lb, Thru-Hole	M78DM	M7.8D/160 Nm, Thru-Hole
78DN	7.8D/1700 in-lb, Thru-Hole	M78DN	M7.8D/192 Nm, Thru-Hole
78DP	7.8D/2600 in-lb, Thru-Hole	M78DP	M7.8D/295 Nm, Thru-Hole
78DQ	7.8D/4200 in-lb, Thru-Hole	M78DQ	M7.8D/475 Nm, Thru-Hole
78DR	7.8D/5000 in-lb, Thru-Hole	M78DR	M7.8D/566 Nm, Thru-Hole
78EA	7.8D/3200 in-lb, Standard, EZ*	M78EA	M7.8D/360 Nm, Standard, EZ*
78EB	7.8D/7200 in-lb, Standard, EZ*	M78EB	M7.8D/815 Nm, Standard, EZ*
78EC	7.8D/10000 in-lb, Standard, EZ*	M78EC	M7.8D/1130 Nm, Standard, EZ*
78ED	7.8D/1400 in-lb, Standard, EZ*	M78ED	M7.8D/160 Nm, Standard, EZ*
78EE	7.8D/1700 in-lb, Standard, EZ*	M78EE	M7.8D/192 Nm, Standard, EZ*
78EF	7.8D/2600 in-lb, Standard, EZ*	M78EF	M7.8D/295 Nm, Standard, EZ*
78EG	7.8D/4200 in-lb, Standard, EZ*	M78EG	M7.8D/475 Nm, Standard, EZ*
78EH	7.8D/5000 in-lb, Standard, EZ*	M78EH	M7.8D/566 Nm, Standard, EZ*
78EJ	7.8D/3200 in-lb, Thru-Hole, EZ	M78EJ	M7.8D/360 Nm, Thru-Hole, EZ
78EK	7.8D/7200 in-lb, Thru-Hole, EZ	M78EK	M7.8D/815 Nm, Thru-Hole, EZ
78EC	7.8D/10000 in-lb, Thru-Hole, EZ	M78EC	M7.8D/1130 Nm, Thru-Hole, EZ
78EM	7.8D/1400 in-lb, Thru-Hole, EZ	M78EM	M7.8D/160 Nm, Thru-Hole, EZ
78EN	7.8D/1700 in-lb, Thru-Hole, EZ	M78EN	M7.8D/192 Nm, Thru-Hole, EZ
78EP	7.8D/2600 in-lb, Thru-Hole, EZ	M78EP	M7.8D/295 Nm, Thru-Hole, EZ
78EQ	7.8D/4200 in-lb, Thru-Hole, EZ	M78EQ	M7.8D/475 Nm, Thru-Hole, EZ
78ER	7.8D/5000 in-lb, Thru-Hole, EZ	M78ER	M7.8D/566 Nm, Thru-Hole, EZ

*Cannot be used with center post options P and B.

5 Motor Control

Code	Description	
000	NO MOTOR CONTROL	
A01	(AC) PowerFlex 523 1HP	120V 1Ph
A02		240V 1Ph
A03		480V 3Ph
A04	(AC) PowerFlex 525 1HP	120V 1Ph
A05		240V 1Ph
A06		480V 3Ph
A07	(AC) PowerFlex 523 2HP	240V 3Ph
A08		480V 3Ph
A09	(AC) PowerFlex 525 2HP	240V 3Ph
A10		480V 3Ph
D01	(DC) Varipak 1HP 90VDC	Uni-Directional
D02		Bi-Directional
D03	(DC) Varipak 2HP 180VDC	Uni-Directional
D04		Bi-Directional

Dimensions and technical information are subject to change without notice

Maximum Inertia x 1000 kg-cm² [lb-in²] for standard package							
Stops	Motion Time [seconds]						
	0.458	0.611	0.764	0.917	1.222	1.528	1.833
2	3 [1]	9 [3]	20 [7]	35 [12]	76 [26]	117 [40]	161 [55]
3	12 [4]	32 [11]	67 [23]	120 [41]	246 [84]	369 [126]	509 [174]
4	23 [8]	59 [20]	120 [41]	214 [73]	439 [150]	661 [226]	907 [310]
6	53 [18]	129 [44]	263 [90]	462 [158]	945 [323]	1419 [485]	1952 [667]
8	94 [32]	234 [80]	468 [160]	825 [282]	1683 [575]	2528 [864]	3474 [1187]
12	214 [73]	530 [181]	989 [338]	1425 [487]	2531 [865]	3956 [1352]	5701 [1948]
16	380 [130]	916 [313]	1481 [506]	2130 [728]	3790 [1295]	5923 [2024]	8528 [2914]
Reducer Ratio							
	15	20	25	30	40	50	60

Other Motions (stops and index periods) available. Contact your DESTACO sales representative for more information.

Features

- R225 Reducer (Ratios from 15:1 to 60:1)
- Single Extended wormshaft (Standard)
- Double Extended Camshaft (Input Shaft)
- Center Thru Hole (Ø57,15 mm [Ø2.25 in.])
- 1 HP AC Drive Package with Inverter Duty Motor and IM-pAC AC Drive (up to 60 cpm)
- Cycle Cam and Limit Switch Mounted to Camshaft
- Right Hand Cam

Output Load Capacity (loads carried during index):

Radial	15747 N [3540 lbs]
Thrust/Axial	31138 N [7000 lbs]
Moment	2443 N-m [21620 in-lb]

Typical Application Dial Diameter: 508 mm [20 in] to 1219 mm [48 in]

Accuracy ±27 arcsec / ±0,08 mm [±.003in] at 609,6 mm [24in] Radius

Repeatability ±7 arcsec / ±0,020 mm [±.0008in] at 609,6 mm [24in] Radius

Optional Accessories

- 1 hp DC Motor
- Varipak DC Motor Control (up to 30 cpm)
- Output Mechanical Overload Clutch – See Page 21
- EZ Mount Dial Adapter
- Stationary Center Post
- Dual Cam and Limit Switch
- Base Riser Blocks
- Electric Clutch-Brake
- Left Hand Cam
- Relief in Dwell for shot-pin applications

902RDM SERIES

Rotary Index Drive | Dimensions

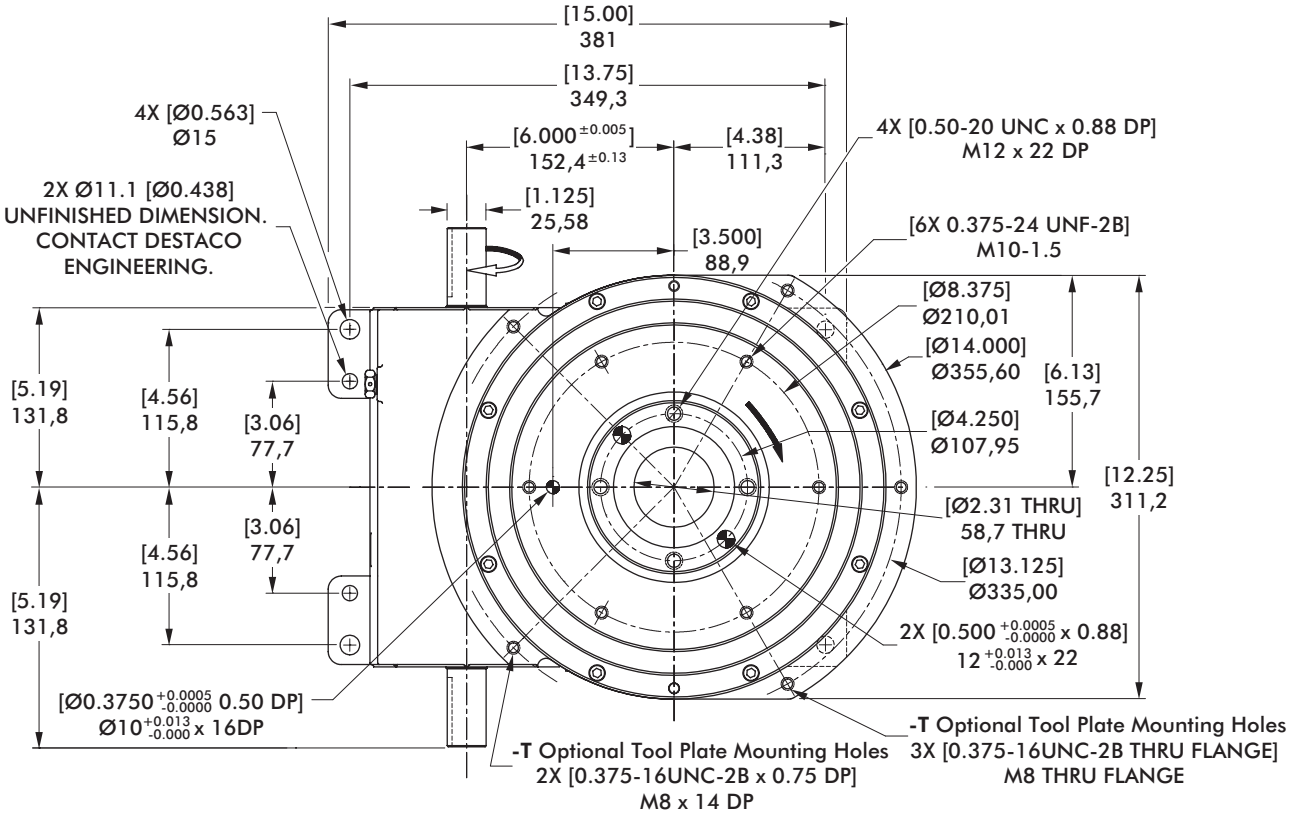

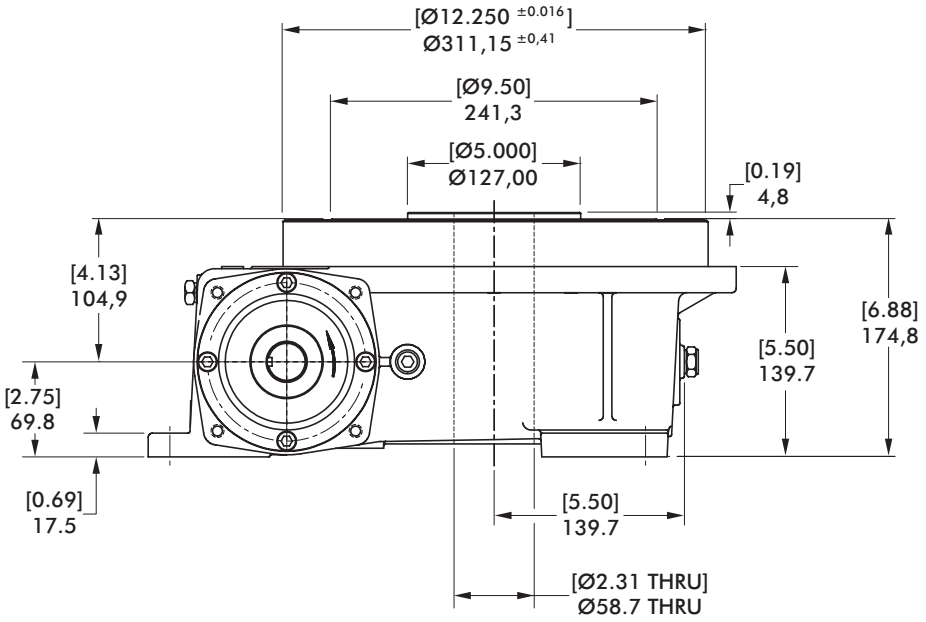

REFERENCE DIMENSION. CONTACT DESTACO ENGINEERING FOR MORE DETAILS.

mm [INCH]

THIRD ANGLE PROJECTION

Center Post

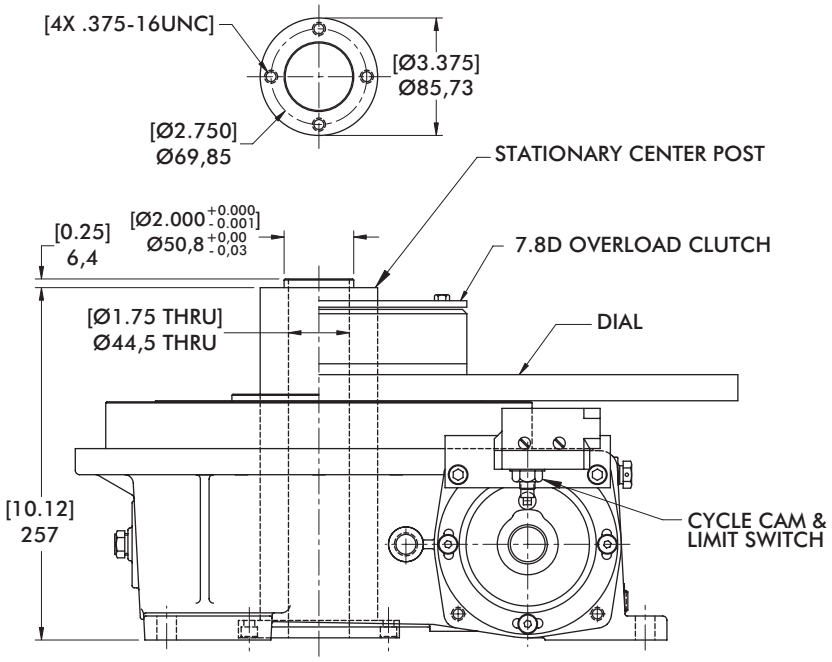

mm [INCH]

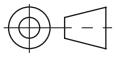

THIRD ANGLE PROJECTION

Proximity Switch

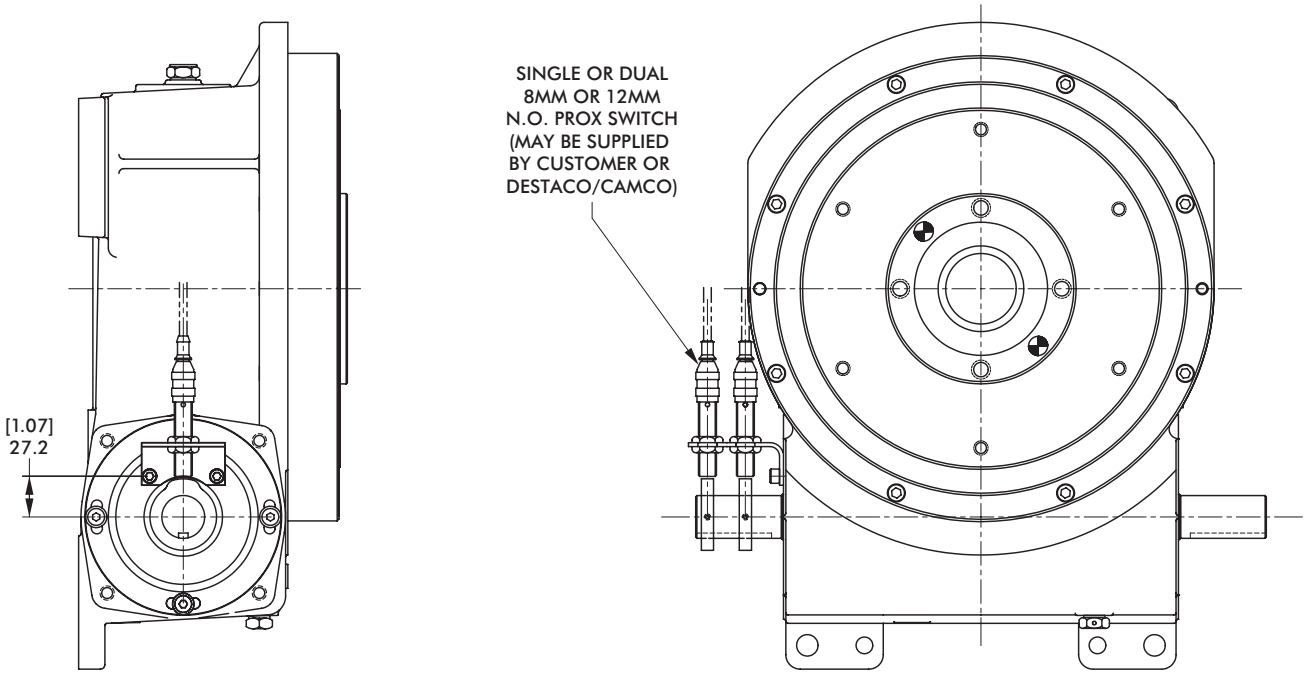

902RDM SERIES

Rotary Index Drive | Dimensions

7.8D Overload Clutch

THRU-HOLE CLUTCH

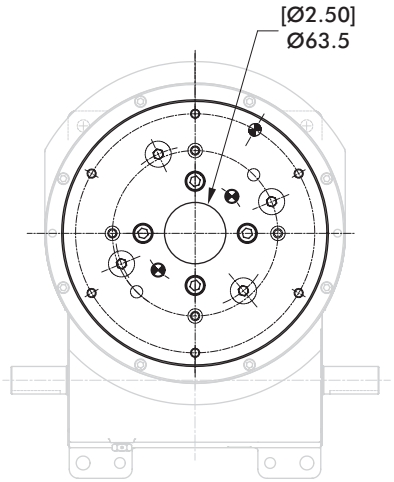

STANDARD CLUTCH

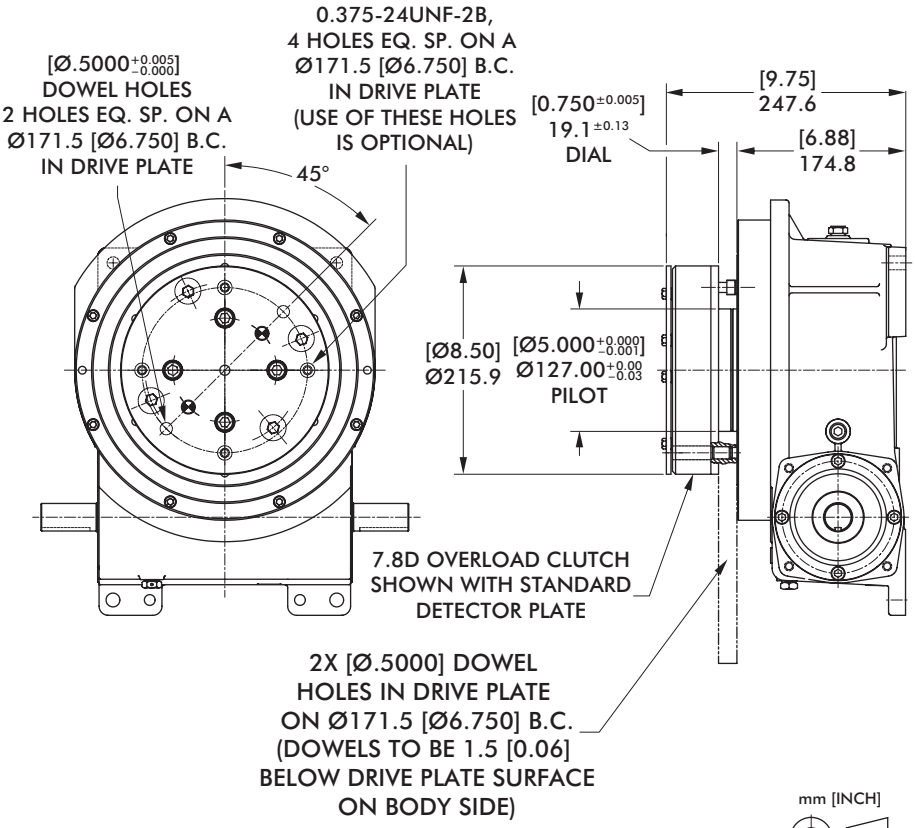

mm [INCH]

THIRD ANGLE PROJECTION

7.8D Overload Clutch with EZ Dial Mounting Adapter

THRU-HOLE EZ CLUTCH

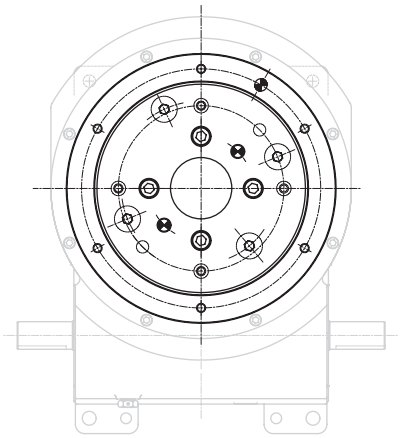

STANDARD EZ CLUTCH

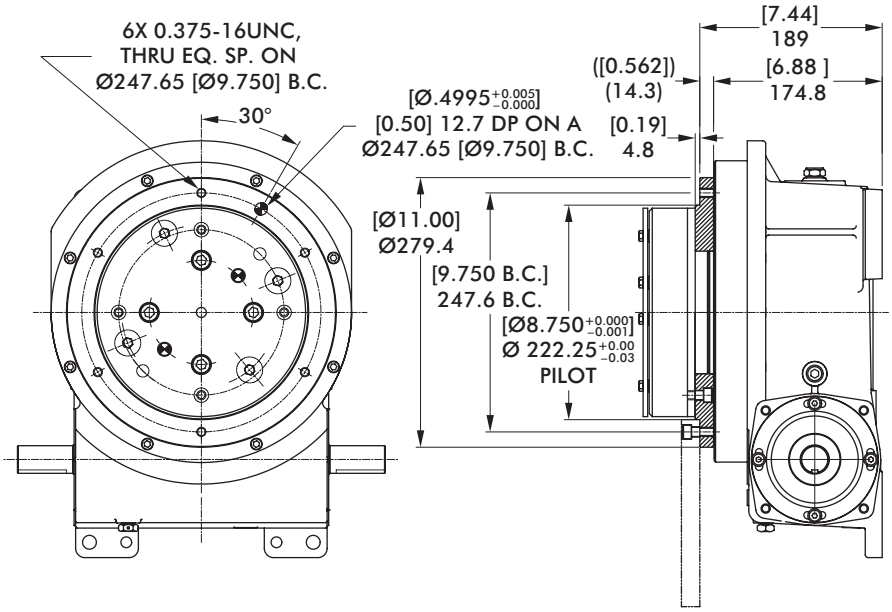

Model	Internal Inertia kg-m² [lb-in²]	Torque Setting N-m [in-lb]
7.8D	0,0778 [266]	158, 192, 294, 362, 475, 565, 813, 1130 [1400, 1700, 2600, 3200, 4200, 5000, 7200, 10000]

Dimensions and technical information are subject to change without notice

Notes

1100RDM SERIES

Rotary Index Drive | How To Order

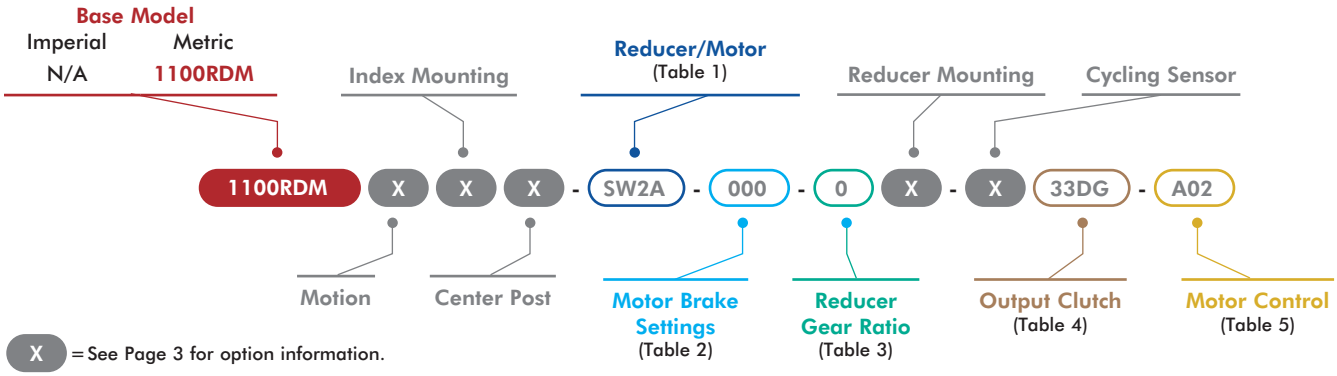

X = See Page 3 for option information.

1 Reducer/Motor Options

Code	Description
0000	No Reducer or Motor*
	7300C Motors
CD1A	Indexer with 7300C Adapter*
CS1B	CONE DRIVE 7300C W/56C Reducer, SE Worm
CS1C	CONE DRIVE 7300C W/145TC Reducer, SE Worm
CS1D	CONE DRIVE 7300C Reducer w/ 1.0HP AC 56C Motor, SE Worm
CS1E	CONE DRIVE 7300C Reducer w/ 2.0HP AC 145TC Motor, SE Worm
CS1F	CONE DRIVE 7300C Reducer w/ 1.0HP 90V DC 56C Motor, SE Worm
CS1G	CONE DRIVE 7300C Reducer w/1.0HP 180V DC 56C Motor, SE Worm
CS1H	CONE DRIVE 7300C Reducer w/2.0HP 180V DC 143TC Motor, SE Worm
CD1B	CONE DRIVE 7300C w/ 56C Reducer, DE Worm
CD1C	CONE DRIVE 7300C w/ 145TC Reducer, DE Worm
CD1D	CONE DRIVE 7300C Reducer w/ 1.0HP AC 56C Motor, DE Worm
CD1E	CONE DRIVE 7300C Reducer w/ 2.0HP AC 145TC Motor, DE Worm
CD1F	CONE DRIVE 7300C Reducer w/ 1.0HP 90V DC 56C Motor, DE Worm
CD1G	CONE DRIVE 7300C Reducer w/ 1.0HP 180V DC 56C Motor, DE Worm
CD1H	CONE DRIVE 7300C Reducer w/ 2.0HP 180V DC 143TC Motor, DE Worm
	SEW KH47 Motors
SW2A	Indexer with KH47 Adapter*
SW2B	SEW KH47DRN80M4/.75Kw Motor/Brake Motor (60Hz, 230/460V)
SW2C	SEW KH47DRN80M4/.75Kw Motor/Brake Motor (50Hz, 200/400V)
SW2D	SEW KH47DRN80M4/.75Kw Motor/Brake Motor (60Hz, 575V)
SW2E	SEW KH47DRN90L4/1.5Kw Motor/Brake Motor (60Hz, 230/460V)
SW2F	SEW KH47DRN90L4/1.5Kw Motor/Brake Motor (50Hz, 200/400V)
	SEW KH57 Motors
SW3A	Indexer with KH57 Adapter*
SW3B	SEW KH57DRN80M4/.75Kw Motor/Brake Motor (60Hz, 230/460V)
SW3C	SEW KH57DRN80M4/.75Kw Motor/Brake Motor (50Hz, 200/400V)
SW3D	SEW KH57DRN80M4/.75Kw Motor/Brake Motor (60Hz, 575V)
SW3E	SEW KH57DRN90L4/1.5Kw Motor/Brake Motor (60Hz, 230/460V)
SW3F	SEW KH57DRN90L4/1.5Kw Motor/Brake Motor (50Hz, 200/400V)
SW3G	SEW KH57DRN90L4/1.5Kw Motor/Brake Motor (60Hz, 575V)
	STM RMI-85 Motors
RM6A	Indexer with RMI-85 Adapter*
RM6B	STM RMI-85/LFB/IEC90-B14 Reducer only
RM6C	STM RMI-85/LFB/IEC100-B14 Reducer only
RM6D	STM RMI-85/LFB/1.1kW Reducer and Motor
RM6E	STM RMI-85/LFB/2.2kW Reducer and Motor

*All Reducer/Motor adapters require Gear Ratio option to be 0.

2 Motor Brake*

Code	Description
000	No Brake
S1A	1.69 Nm (BE05)
S1B	2.49 Nm (BE05)
S1C	3.50 Nm (BE05)
S2A	4.97 Nm (BE1)
S2B	7.01 Nm (BE1)
S2C	9.94 Nm (BE1)
S3A	9.94 Nm (BE2)
S3B	14.01 Nm (BE2)
S3C	20.00 Nm (BE2)
S4A	20.00 Nm (BE5)
S4B	28.02 Nm (BE5)
S4C	40.00 Nm (BE5)
S4D	55.03 Nm (BE5)

*SEW Motor brake setting options only. All other motors use option code 000.

3 Reducer Gear Ratios*

Code	Description			
	7300C	SEW KH47	SEW KH57	STM RMI-85
0	N/A	N/A	N/A	N/A
A	10:1	10.56:1	9.59:1	10:1
B	15:1	15.86:1	15.22:1	15:1
C	20:1	19.58:1	19.34:1	20:1
D	25:1	29.32:1	30.28:1	28:1
E	30:1	39.61:1	38.49:1	40:1
F	40:1	48.95:1	48.89:1	49:1
G	50:1	63.30:1	60.81:1	56:1
H	60:1	69.84:1	69.12:1	70:1

*All Reducer/Motor adapters require Gear Ratio option to be 0.

Select Gear ratio column based on the reducer type selected.

4 Output Clutch & Settings

1100RDM Metric Clutch Models

Code	Description
0000	No Output Overload Clutch
33DA	33D/960 Nm, Standard*
33DB	33D/1470 Nm, Standard Clutch*
33DC	33D/1865 Nm, Standard Clutch*
33DD	33D/2260 Nm, Standard Clutch*
33DE	33D/2655 Nm, Standard Clutch*
33DF	33D/2880 Nm, Standard Clutch*
33DG	33D/3500 Nm, Standard Clutch*
33DH	33D/960 Nm, Thru-Hole Clutch
33DJ	33D/1470 Nm, Thru-Hole Clutch
33DK	33D/1865 Nm, Thru-Hole Clutch
33DL	33D/2260 Nm, Thru-Hole Clutch
33DM	33D/2655 Nm, Thru-Hole Clutch
33DN	33D/2880 Nm, Thru-Hole Clutch
33DP	33D/3500 Nm, Thru-Hole Clutch
33EA	33D/960 Nm, Standard Clutch, EZ*
33EB	33D/1470 Nm, Standard Clutch, EZ*
33EC	33D/1865 Nm, Standard Clutch, EZ*
33ED	33D/2260 Nm, Standard Clutch, EZ*
33EE	33D/2655 Nm, Standard Clutch, EZ*
33EF	33D/2880 Nm, Standard Clutch, EZ*
33EG	33D/3500 Nm, Standard Clutch, EZ*
33EH	33D/960 Nm, Thru-Hole Clutch, EZ
33EJ	33D/1470 Nm, Thru-Hole Clutch, EZ
33EK	33D/1865 Nm, Thru-Hole Clutch, EZ
33EL	33D/2260 Nm, Thru-Hole Clutch, EZ
33EM	33D/2655 Nm, Thru-Hole Clutch, EZ
33EN	33D/2880 Nm, Thru-Hole Clutch, EZ
33EP	33D/3500 Nm, Thru-Hole Clutch, EZ

*Cannot be used with center post options P and B.

5 Motor Control

Code	Description	
000	NO MOTOR CONTROL	
A01	(AC) PowerFlex 523 1HP	120V 1Ph
A02		240V 1Ph
A03		480V 3Ph
A04	(AC) PowerFlex 525 1HP	120V 1Ph
A05		240V 1Ph
A06		480V 3Ph
A07	(AC) PowerFlex 523 2HP	240V 3Ph
A08		480V 3Ph
A09	(AC) PowerFlex 525 2HP	240V 3Ph
A10		480V 3Ph
A11	(AC) PowerFlex 523 3HP	240V 3Ph
A12		480V 3Ph
A13	(AC) PowerFlex 525 3HP	240V 1Ph
A14		480V 3Ph
A15	(AC) PowerFlex 523 5HP	480V 3Ph
A16		600V 3Ph
A17	(AC) PowerFlex 525 5HP	480V 3Ph
A18		600V 3Ph
D01	(DC) Varipak 1HP 90VDC	Uni-Directional
D02		Bi-Directional
D03	(DC) Varipak 2HP 180VDC	Uni-Directional
D04		Bi-Directional
D05	(DC) Cycletrol 3HP 180VDC	

Dimensions and technical information are subject to change without notice

Maximum Inertia x 1000 kg-cm² [lb-in²] for standard package							
Stops	Motion Time [seconds]						
	0.458	0.611	0.764	0.917	1.222	1.528	1.833
2	3 [1]	15 [5]	32 [11]	64 [22]	176 [60]	342 [117]	518 [177]
3	18 [6]	38 [13]	79 [27]	152 [52]	401 [137]	775 [265]	1171 [400]
4	38 [13]	79 [27]	161 [55]	304 [104]	790 [270]	1525 [521]	2297 [785]
6	88 [30]	179 [61]	351 [120]	664 [227]	1703 [582]	3283 [1122]	4940 [1688]
8	161 [55]	325 [111]	632 [216]	1185 [405]	3035 [1037]	5838 [1995]	7916 [2705]
12	369 [126]	735 [251]	1428 [488]	2672 [913]	6833 [2335]	12563 [4293]	16932 [5786]
16	658 [225]	1314 [449]	2543 [869]	4138 [1414]	7781 [2659]	11884 [4061]	16019 [5474]
Reducer Ratio							
	15.86	19.58	24.06	29.32	39.61	48.95	56.83

Other Motions (stops and index periods) available. Contact your DESTACO sales representative for more information.

Features

- KH47 Reducer and AC Motor with Optional Brake
- Double Extended Camshaft (Input Shaft)
- Center Thru Hole (Ø130 mm [Ø5.1 in.])
- AC drive package with Inverter Duty Motor and Inverter Drive (up to 60 cpm)
- Cycle Cam and Limit Switch Mounted to Camshaft
- Right Hand Cam

Optional Accessories

- 7300C Reducer (Ratios from 15:1 to 60:1)
- 1.5 HP DC motor
- Varipak DC Motor Control (up to 30 cpm)
- Output Mechanical Overload Clutch
  – See Page 27
- EZ Mount Dial Adapter
- 7350C Heavy Duty Reducer (Ratios from 10:1 to 60:1)
- Stationary Center Post
- Dual Cam and Limit Switch
- Left Hand Cam
- Relief in Dwell for shot-pin applications

Output Load Capacity (loads carried during index):

Radial	13789 N [3100 lbs]
Thrust/Axial	35586 N [8000 lbs]
Moment	3240 N-m [28674 in-lb]

Typical Application Dial Diameter:	508 mm [20 in] to 1524 mm [60 in]
Accuracy	±22 arcsec / ±0,08 mm [±.003in] at 76 mm [30in] Radius
Repeatability	±5 arcsec / ±0,020 mm [±.0008in] at 762 mm [30in] Radius

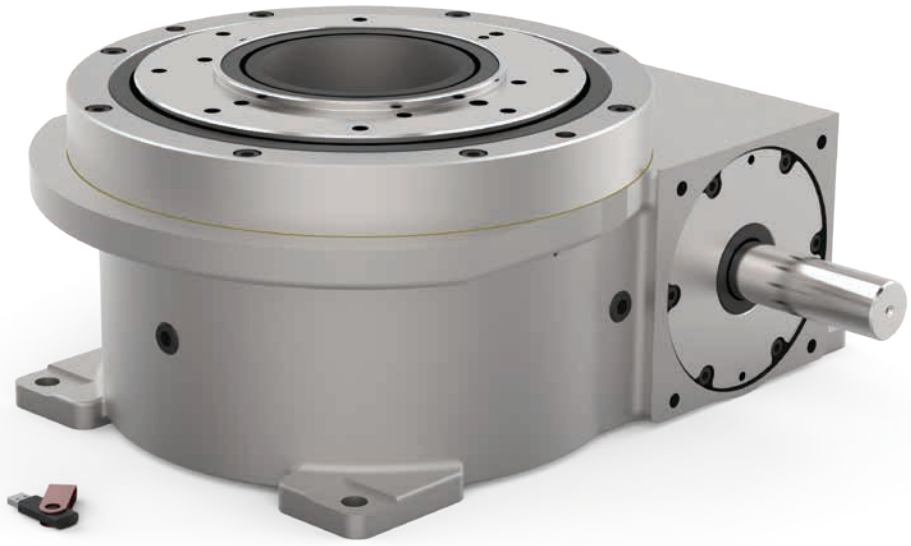

1100RDM SERIES

Rotary Index Drive | Dimensions

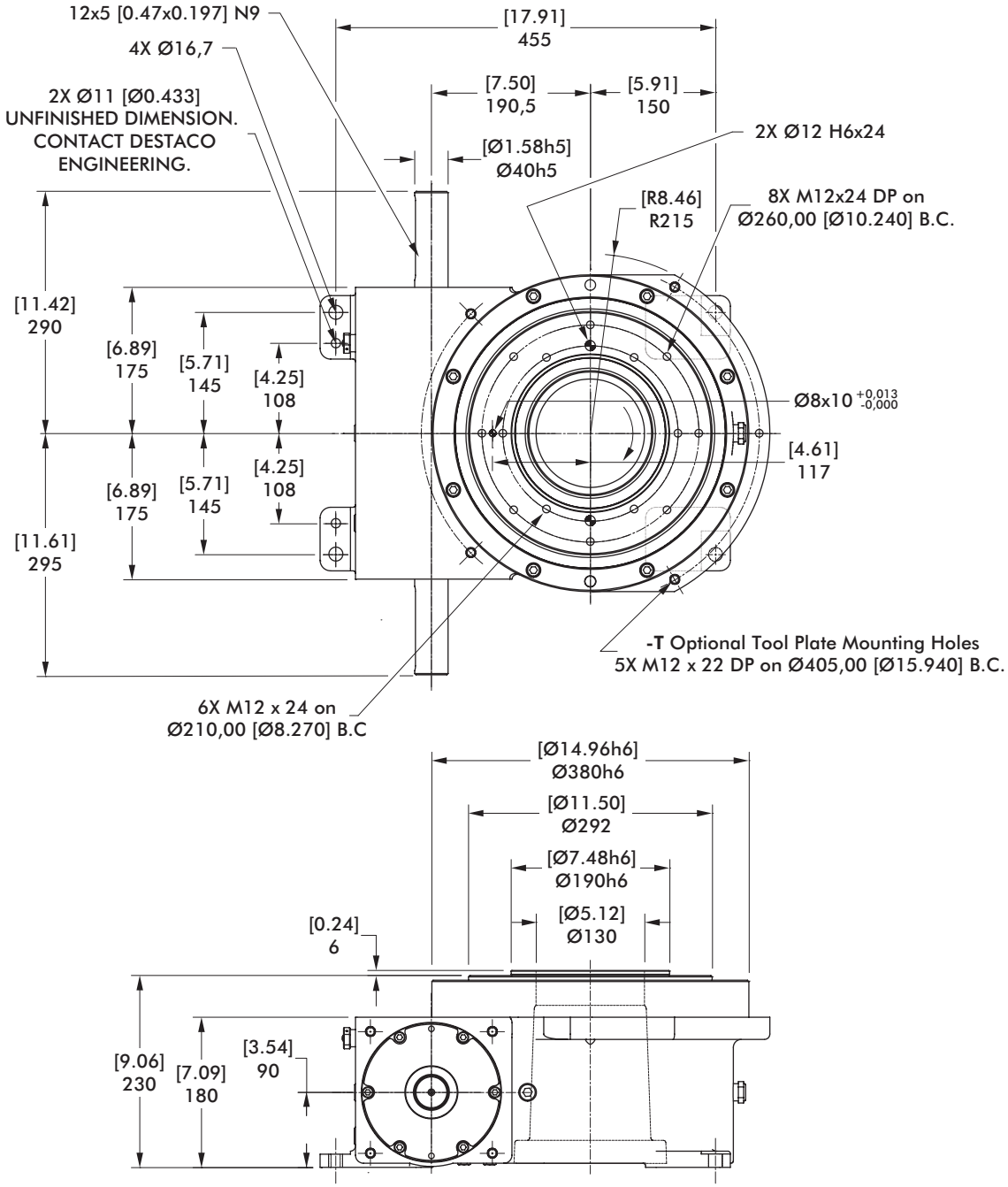

mm [INCH]

THIRD ANGLE PROJECTION

Dimensions and technical information are subject to change without notice

Center Post

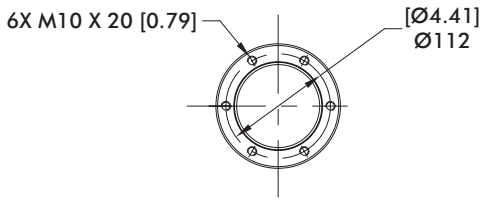

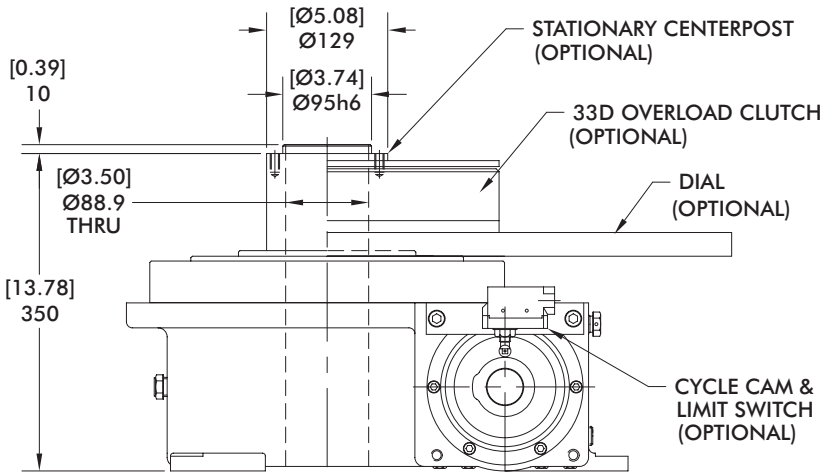

mm [INCH]

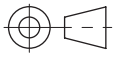

THIRD ANGLE
PROJECTION

Proximity Switch

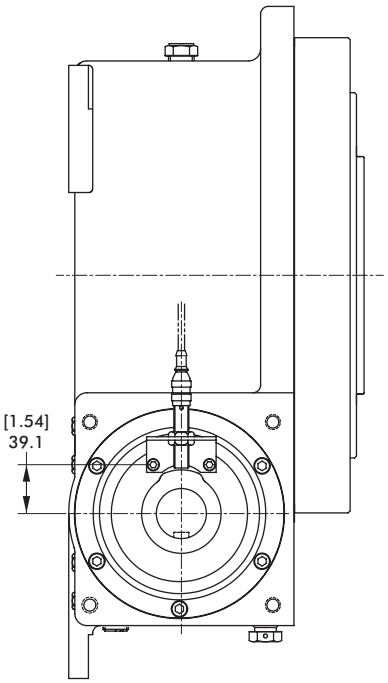

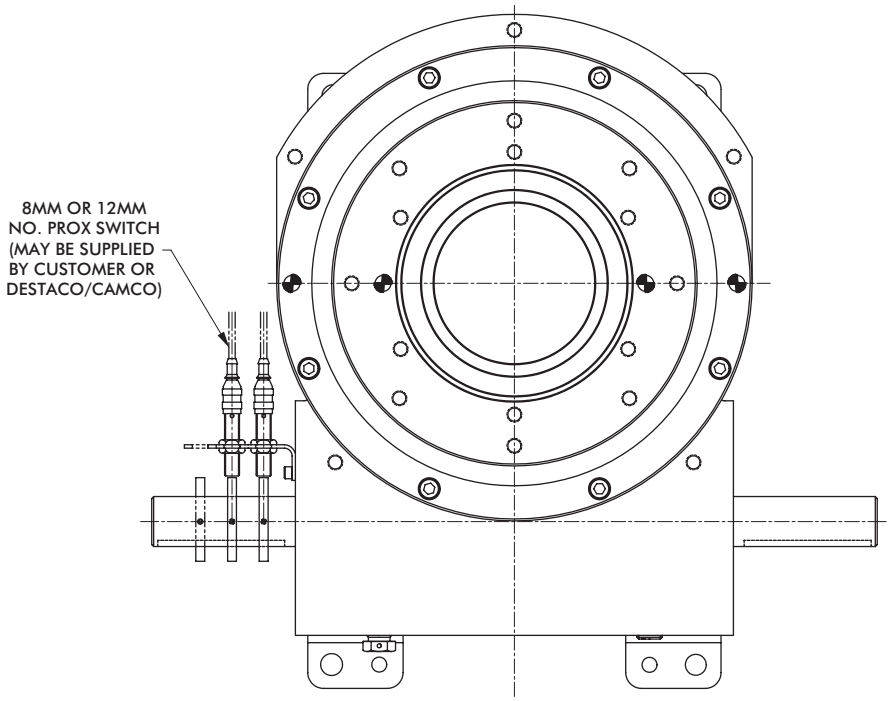

1100RDM SERIES

Rotary Index Drive | Dimensions

33D Overload Clutch

THRU-HOLE CLUTCH

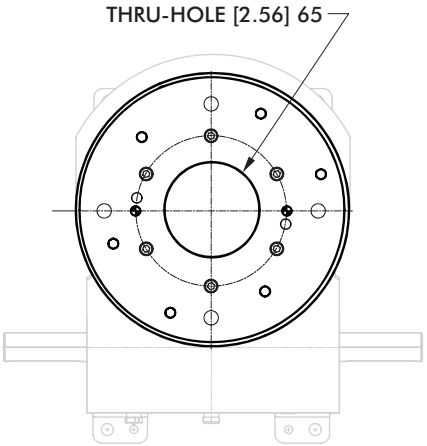

STANDARD CLUTCH

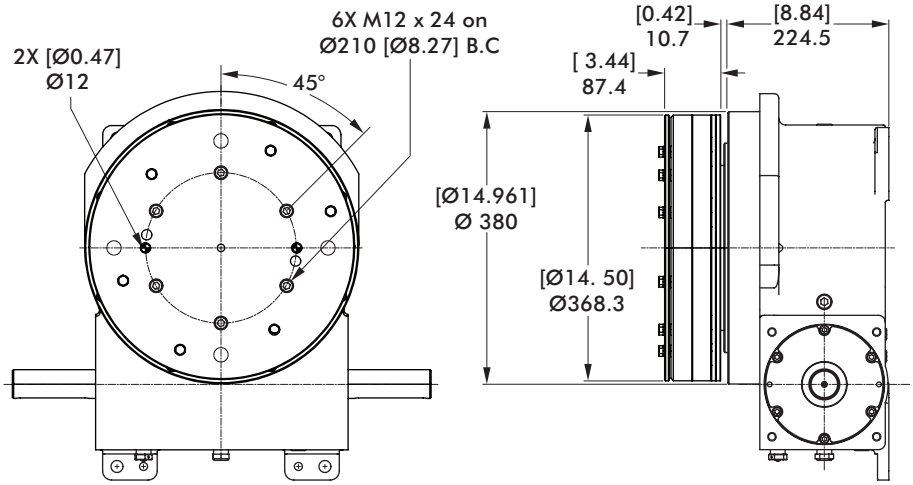

mm [INCH]

THIRD ANGLE PROJECTION

33D Overload Clutch with EZ Dial Mounting Adapter

THRU-HOLE EZ CLUTCH

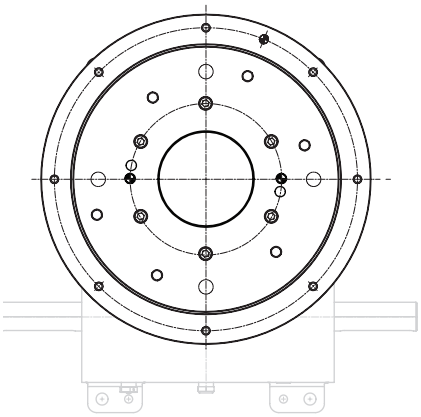

STANDARD EZ CLUTCH

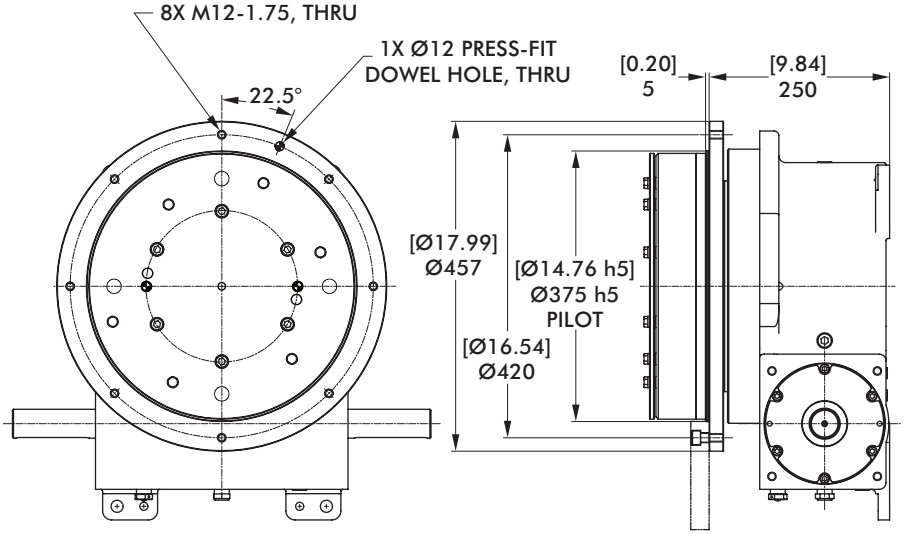

Model	Internal Inertia kg-m² [lb-in²]	Torque Setting N-m [in-lb]
33D	0,852 [2910]	960, 1469, 2260, 2881 [8500, 13000, 20000, 25500]

Dimensions and technical information are subject to change without notice

Notes

1305RDM SERIES

Rotary Index Drive | How To Order

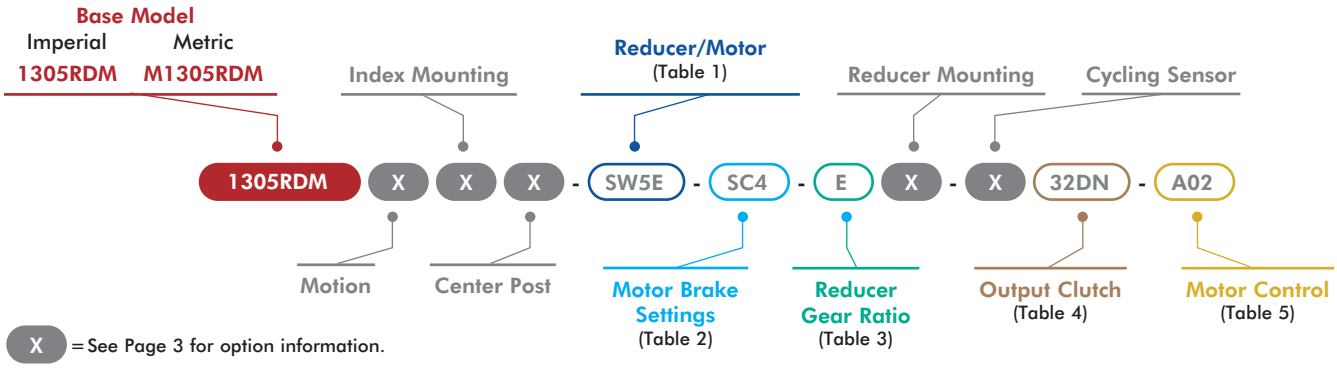

X = See Page 3 for option information.

1 Reducer/Motor Options*

Code	Description
0000	No Reducer or Motor*
	7350C Motors
CD2A	Indexer with 7350C Adapter*
CS2B	7350C w/56C Reducer, SE Worm
CS2C	7350C w/145TC Reducer, SE Worm
CS2D	CONE DRIVE 7350C Reducer w/ 1.0HP AC 56C Motor, SE Worm
CS2E	CONE DRIVE 7350C Reducer w/ 2.0HP AC 145TC Motor, SE Worm
CS2F	CONE DRIVE 7350C Reducer w/ 1.0HP 90V DC 56C Motor, SE Worm
CS2G	CONE DRIVE 7350C Reducer w/1.0HP 180V DC 56C Motor, SE Worm
CS2H	CONE DRIVE 7350C Reducer w/2.0HP 180V DC 143TC Motor, SE Worm
CD2B	CONE DRIVE 7350C w/ 56C Reducer, DE Worm
CD2C	7350C w/145TC Reducer, DE Worm
CD2D	CONE DRIVE 7350C Reducer w/ 1.0HP AC 56C Motor, DE Worm
CD2E	CONE DRIVE 7350CReducer w/ 2.0HP AC 145TC Motor, DE Worm
CD2F	CONE DRIVE 7350C Reducer w/ 1.0HP 90V DC 56C Motor, DE Worm
CD2G	CONE DRIVE 7350C Reducer w/ 1.0HP 180V DC 56C Motor, DE Worm
CD2H	CONE DRIVE 7350C Reducer w/ 2.0HP 180V DC 143TC Motor, DE Worm
	SEW KH67 Motors
SW4A	Indexer with KH67 Adapter*
SW4B	SEW KH67DRN80M4 Reducer with 0.75Kw Motor (60Hz, 230/460V)
SW4C	SEW KH67DRN80M4 Reducer with 0.75Kw Motor (50Hz, 400V)
SW4D	SEW KH67DRN80M4 Reducer with 0.75Kw Motor (60Hz, 575V)
SW4E	SEW KH67DRN90L4 Reducer with 1.5Kw Motor (60Hz, 230/460V)
SW4F	SEW KH67DRN90L4 Reducer with 1.5Kw Motor (50Hz, 400V)
SW4G	SEW KH67DRN90L4 Reducer with 1.5Kw Motor (60Hz, 575V)
	SEW KH77 Motors
SW5A	Indexer with KH77 Adapter*
SW5B	SEW KH77DRN80M4 Reducer with 0.75Kw Motor (60Hz, 230/460V)
SW5C	SEW KH77DRN80M4 Reducer with 0.75Kw Motor (50Hz, 400V)
SW5D	SEW KH77DRN80M4 Reducer with 0.75Kw Motor (60Hz, 575V)
SW5E	SEW KH77DRN90L4 Reducer with 1.5Kw Motor (60Hz, 230/460V)
SW5F	SEW KH77DRN90L4 Reducer with 1.5Kw Motor (50Hz, 400V)
SW5G	SEW KH77DRN90L4 Reducer with 1.5Kw Motor (60Hz, 575V)
	STM RMI-110 Motors
RM7A	Indexer with RMI-110 Adapter*
RM7B	STM RMI-110/LFB/IEC90-B14 Reducer only
RM7C	STM RMI-110/LFB/IEC100-B14 Reducer only
RM7D	STM RMI-110/LFB/1.1kW Reducer and Motor
RM7E	STM RMI-110/LFB/2.2kW Reducer and Motor

*All Reducer/Motor adapters require Gear Ratio option to be 0.

2 Motor Brake*

Code	Description
000	(NO BRAKE/NO SEW)
S1A	1.69 Nm (BE05)
S1B	2.49 Nm (BE05)
S1C	3.50 Nm (BE05)
S2A	4.97 Nm (BE1)
S2B	7.01 Nm (BE1)
S2C	9.94 Nm (BE1)
S3A	9.94 Nm (BE2)
S3B	14.01 Nm (BE2)
S3C	20.00 Nm (BE2)
S4A	20.00 Nm (BE5)
S4B	28.02 Nm (BE5)
S4C	40.00 Nm (BE5)
S4D	55.03 Nm (BE5)

*SEW Motor brake setting options only. All other motors use option code 000.

3 Reducer Gear Ratios*

Code	Description			
	7350C	SEW KH67	SEW KH77	STM RMI-110
0	N/A	N/A	N/A	N/A
A	10:1	9.66:1	9.56:1	10:1
B	15:1	15.19:1	15.84:1	15:1
C	20:1	19.30:1	20.25:1	20:1
D	28:1	30.22:1	29.27:1	25:1
E	40:1	38.39:1	40.04:1	30:1
F	49:1	48.77:1	51.18:1	40:1
G	56:1	60.66:1	58.34:1	50:1
H	70:1	68.95:1	73.99:1	60:1

*All Reducer/Motor adapters require Gear Ratio option to be 0.

Select Gear ratio column based on the reducer type selected.

4 Output Clutch & Settings

1305RDM Imperial Clutch Models

Code	Description
0000	No Output Overload Clutch
32DA	32D/8500 in-lb, Standard*
32DB	32D/13000 in-lb, Standard*
32DC	32D/20000 in-lb, Standard*
32DD	32D/31000 in-lb, Standard*
32DE	32D/16500 in-lb, Standard*
32DF	32D/25500 in-lb, Standard*
32DG	32D/23500 in-lb, Standard*
32DH	32D/8500 in-lb, Thru-Hole
32DJ	32D/13000 in-lb, Thru-Hole
32DK	32D/20000 in-lb, Thru-Hole
32DL	32D/31000 in-lb, Thru-Hole
32DM	32D/16500 in-lb, Thru-Hole
32DN	32D/25500 in-lb, Thru-Hole
32DP	32D/23500 in-lb, Thru-Hole
32EA	32D/8500 in-lb, Standard, EZ*
32EB	32D/13000 in-lb, Standard, EZ*
32EC	32D/20000 in-lb, Standard, EZ*
32ED	32D/31000 in-lb, Standard, EZ*
32EE	32D/16500 in-lb, Standard, EZ*
32EF	32D/25500 in-lb, Standard, EZ*
32EG	32D/23500 in-lb, Standard, EZ*
32EH	32D/8500 in-lb, Thru-Hole, EZ
32EJ	32D/13000 in-lb, Thru-Hole, EZ
32EK	32D/20000 in-lb, Thru-Hole, EZ
32EL	32D/31000 in-lb, Thru-Hole, EZ
32EM	32D/16500 in-lb, Thru-Hole, EZ
32EN	32D/25500 in-lb, Thru-Hole, EZ
32EP	32D/23500 in-lb, Thru-Hole, EZ

M1305RDM Metric Clutch Models

Code	Description
0000	No Output Overload Clutch
M32DA	M32D/960 Nm, Standard*
M32DB	M32D/1470 Nm, Standard*
M32DC	M32D/2260 Nm, Standard*
M32DD	M32D/3500 Nm, Standard*
M32DE	M32D/1865 Nm, Standard*
M32DF	M32D/2880 Nm, Standard*
M32DG	M32D/2655 Nm, Standard*
M32DH	M32D/960 Nm, Thru-Hole
M32DJ	M32D/1470 Nm, Thru-Hole
M32DK	M32D/2260 Nm, Thru-Hole
M32DL	M32D/3500 Nm, Thru-Hole
M32DM	M32D/1865 Nm, Thru-Hole
M32DN	M32D/2880 Nm, Thru-Hole
M32DP	M32D/2655 Nm, Thru-Hole
M32EA	M32D/960 Nm, Standard, EZ*
M32EB	M32D/1470 Nm, Standard, EZ*
M32EC	M32D/2260 Nm, Standard, EZ*
M32ED	M32D/3500 Nm, Standard, EZ*
M32EE	M32D/1865 Nm, Standard, EZ*
M32EF	M32D/2880 Nm, Standard, EZ*
M32EG	M32D/2655 Nm, Standard, EZ*
M32EH	M32D/960 Nm, Thru-Hole, EZ
M32EJ	M32D/1470 Nm, Thru-Hole, EZ
M32EK	M32D/2260 Nm, Thru-Hole, EZ
M32EL	M32D/3500 Nm, Thru-Hole, EZ
M32EM	M32D/1865 Nm, Thru-Hole, EZ
M32EN	M32D/2880 Nm, Thru-Hole, EZ
M32EP	M32D/2655 Nm, Thru-Hole, EZ

*Cannot be used with center post options P and B.

5 Motor Control

Code	Description	
000	NO MOTOR CONTROL	
A01	(AC) PowerFlex 523 1HP	120V 1Ph
A02		240V 1Ph
A03		480V 3Ph
A04	(AC) PowerFlex 525 1HP	120V 1Ph
A05		240V 1Ph
A06		480V 3Ph
A07	(AC) PowerFlex 523 2HP	240V 3Ph
A08		480V 3Ph
A09	(AC) PowerFlex 525 2HP	240V 3Ph
A10		480V 3Ph
A11	(AC) PowerFlex 523 3HP	240V 3Ph
A12		480V 3Ph
A13	(AC) PowerFlex 525 3HP	240V 1Ph
A14		480V 3Ph
A15	(AC) PowerFlex 523 5HP	480V 3Ph
A16		600V 3Ph
A17	(AC) PowerFlex 525 5HP	480V 3Ph
A18		600V 3Ph
D01	(DC) Varipak 1HP 90VDC	Uni-Directional
D02		Bi-Directional
D03	(DC) Varipak 2HP 180VDC	Uni-Directional
D04		Bi-Directional
D05	(DC) Cycletrol 3HP 180VDC	

Dimensions and technical information are subject to change without notice

Maximum Inertia x 1000 kg-cm² [lb-in²] for standard package							
Stops	Motion Time [seconds]						
	0.458	0.611	0.764	0.917	1.222	1.528	1.833
2	0 [0]	12 [4]	38 [13]	76 [26]	140 [48]	214 [73]	298 [102]
3	6 [2]	32 [11]	76 [26]	146 [50]	258 [88]	389 [133]	538 [184]
4	29 [10]	94 [32]	208 [71]	380 [130]	664 [227]	995 [340]	1367 [467]
6	73 [25]	211 [72]	451 [154]	822 [281]	1419 [485]	2119 [724]	2909 [994]
8	138 [47]	383 [131]	811 [277]	1469 [502]	2528 [864]	3775 [1290]	5180 [1770]
12	325 [111]	878 [300]	1841 [629]	3319 [1134]	5706 [1950]	8510 [2908]	11670 [3988]
16	585 [200]	1571 [537]	3280 [1121]	5908 [2019]	10155 [3470]	15138 [5173]	20754 [7092]
	Reducer Ratio						
	15	20	25	30	40	50	60

Other Motions (stops and index periods) available. Contact your DESTACO sales representative for more information.

Features

- 7300C Reducer (Ratios from 15:1 to 60:1)
- Double Extended Camshaft (Input Shaft)
- Center Thru Hole (Ø127 mm [Ø5.00 in.])
- 2 HP AC Drive Package with Inverter Duty Motor and Inverter Drive (up to 60 cpm)
- Cycle Cam and Limit Switch Mounted to Camshaft
- Right Hand Cam

Optional Accessories

- 2 hp DC Motor
- Varipak DC Motor Control (up to 30 cpm)
- 7350C Heavy Duty Reducer (Ratios from 10:1 to 60:1)
- Output Mechanical Overload Clutch
  – See Page 33
- EZ Mount Dial Adapter
- Stationary Center Post
- Dual Cam and Limit Switch
- Base Riser Blocks
- Electric Clutch-Brake
- Left Hand Cam
- Relief in Dwell for shot-pin applications

Output Load Capacity (loads carried during index):

Radial	20684 N [4650 lbs]
Thrust/Axial	51822 N [11650 lbs]
Moment	4579 N-m [40528 in-lb]

Typical Application Dial Diameter: 508 mm [20 in] to 1829 mm [72 in]

Accuracy ±38 arcsec / ±0,18 mm [±.007in] at 914,4 mm [36in] Radius

Repeatability ±10 arcsec / ±0,05 mm [±.002in] at 914,4 mm [36in] Radius

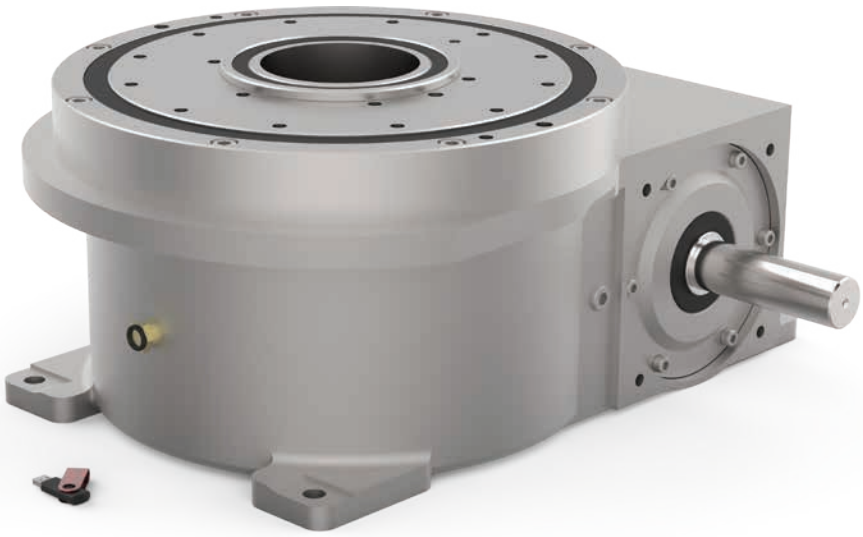

1305RDM SERIES

Rotary Index Drive | Dimensions

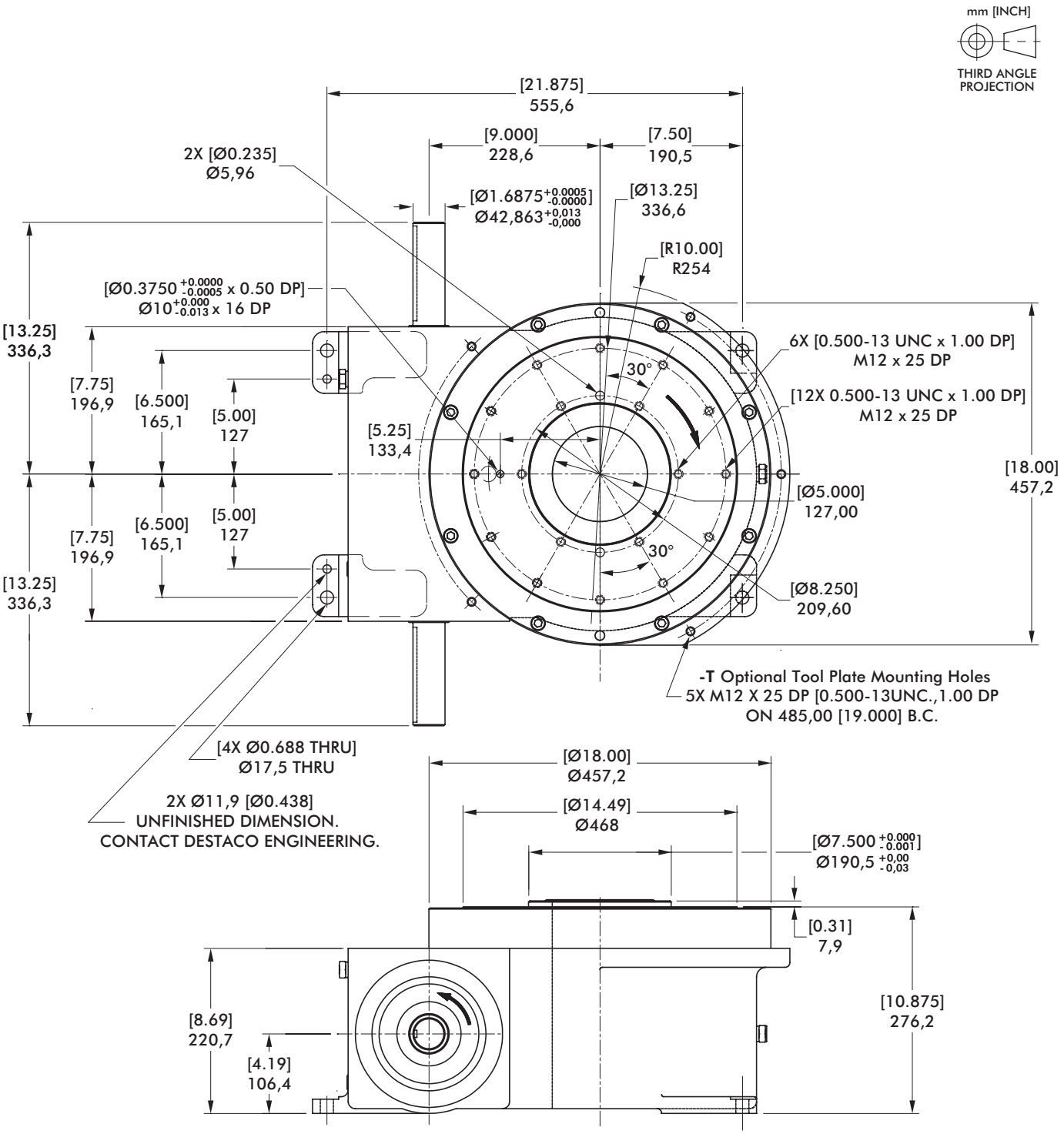

Dimensions and technical information are subject to change without notice

Center Post

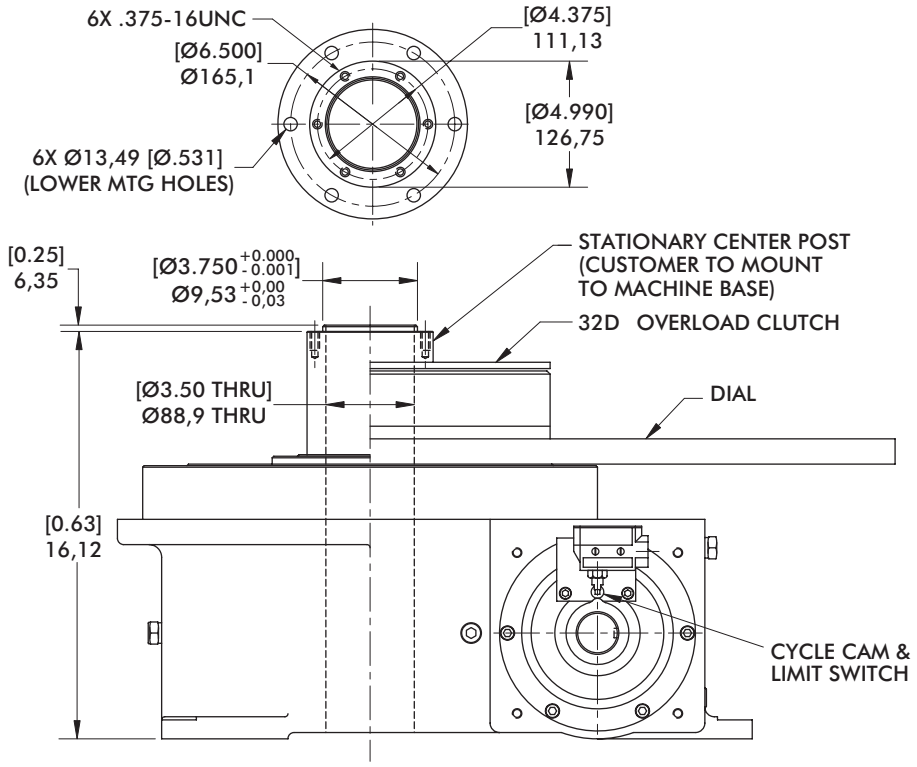

mm [INCH]

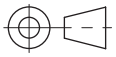

THIRD ANGLE
PROJECTION

Proximity Switch

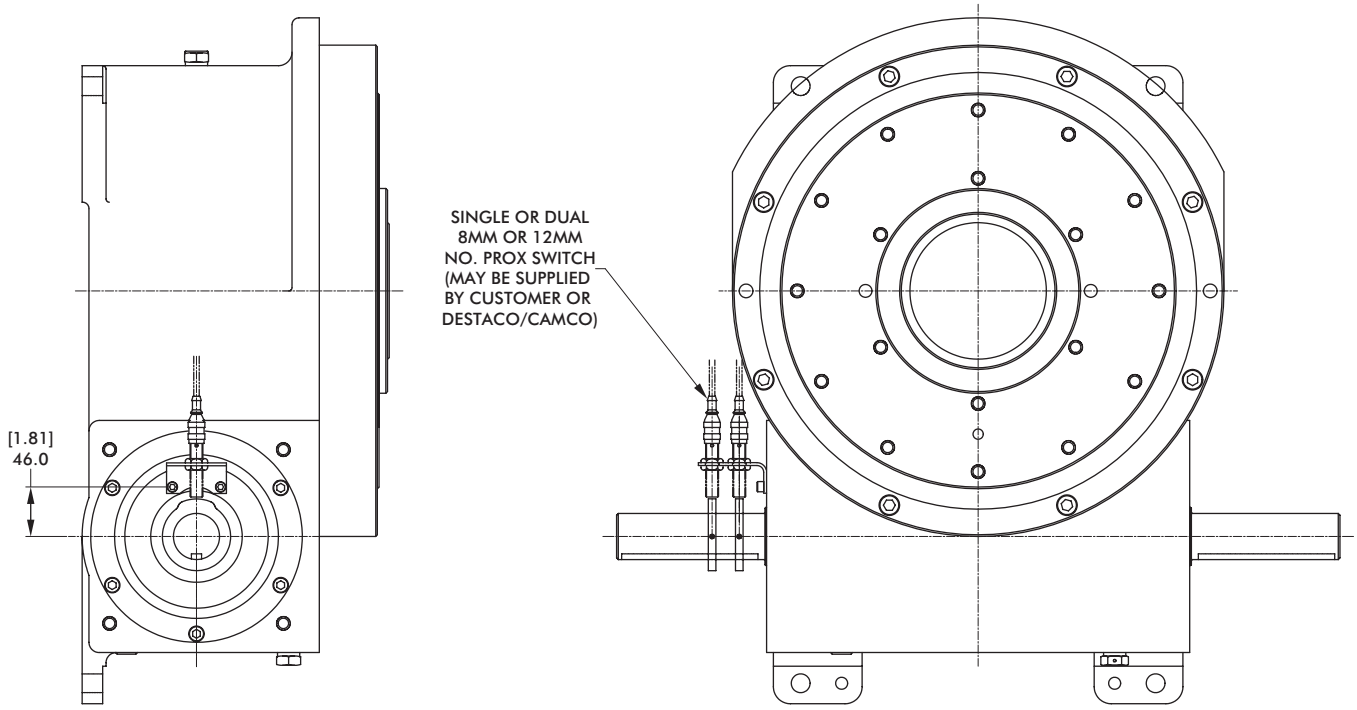

1305RDM SERIES

Rotary Index Drive | Dimensions

32D Overload Clutch

THRU-HOLE CLUTCH

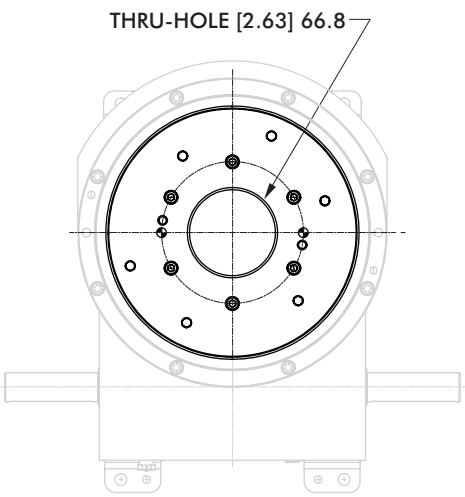

STANDARD CLUTCH

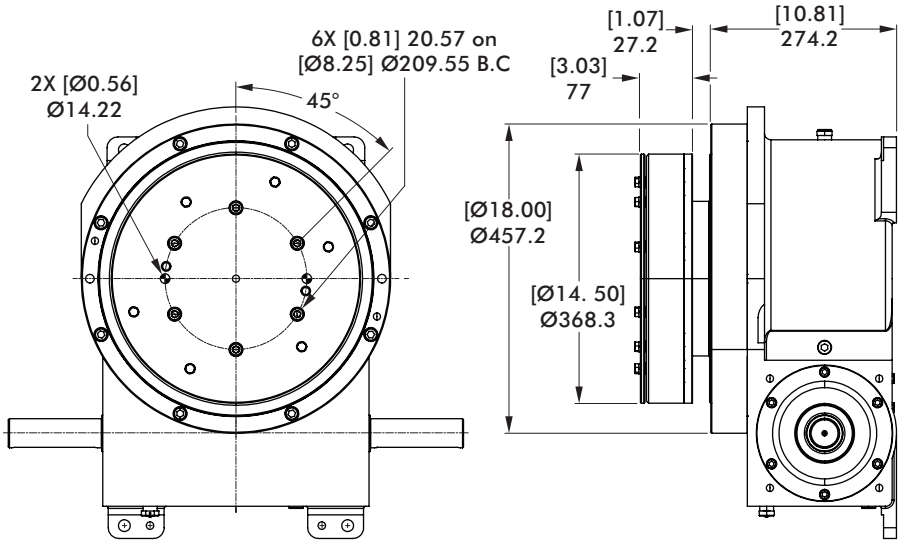

32D Overload Clutch with EZ Dial Mounting Adapter

mm [INCH]

THIRD ANGLE PROJECTION

THRU-HOLE EZ CLUTCH

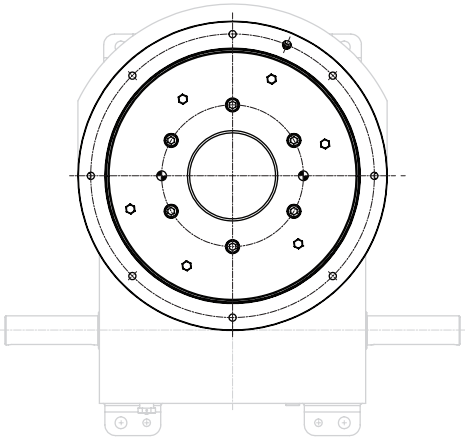

STANDARD EZ CLUTCH

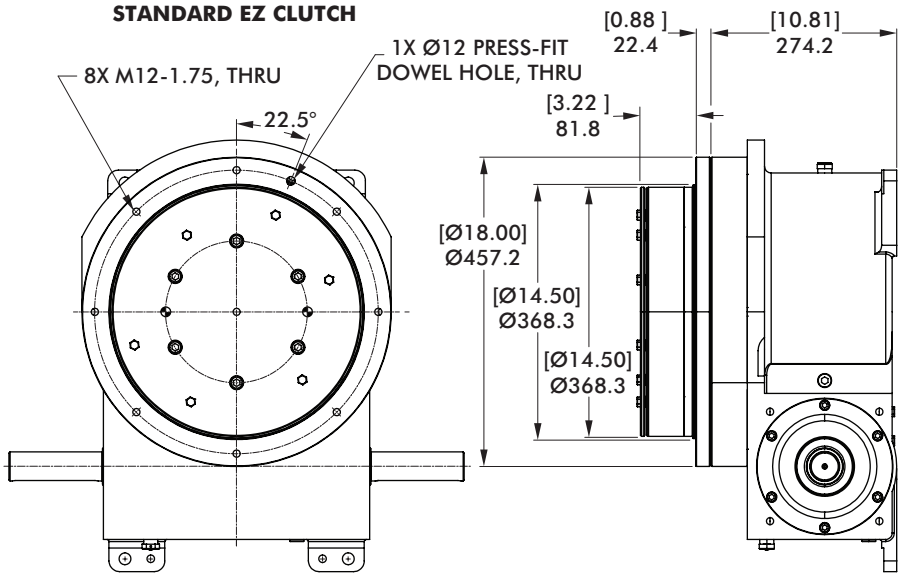

Model	Internal Inertia kg-m² [lb-in²]	Torque Setting N-m [in-lb]
32D	0,852 [2910]	960, 1469, 2260, 3503 [8500, 13000, 20000, 31000]

Dimensions and technical information are subject to change without notice

Notes

1800RDM SERIES

Rotary Index Drive | How To Order

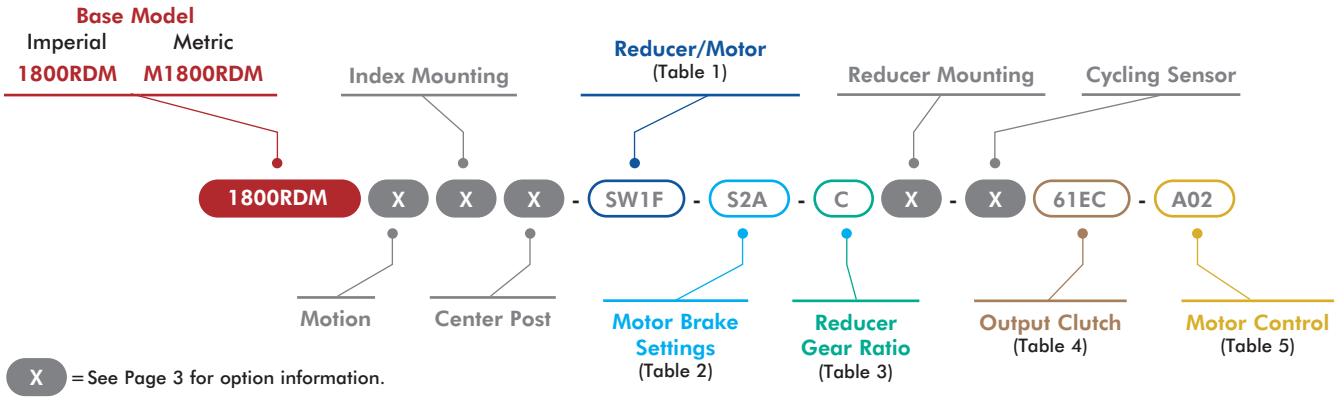

X = See Page 3 for option information.

1 Reducer/Motor Options

Code	Description
0000	No Reducer or Motor*
	7400C Motors
CD3A	Indexer with 7400C Adapter*
CS3B	7400C w/145TC Reducer, SE Worm
CS3C	7400C w/182TC Reducer, SE Worm
CS3D	CONE DRIVE 7400C Reducer w/ 2.0HP AC 145TC Motor, SE Worm
CS3E	CONE DRIVE 7400C Reducer w/ 3.0HP AC 182TC Motor, SE Worm
CS2F	CONE DRIVE 7400C Reducer w/2.0HP 180V DC 143TC Motor, SE Worm
CS2G	CONE DRIVE 7400C Reducer w/3.0HP 180V DC 145TC Motor, SE Worm
CD3B	7400C w/145TC Reducer, DE Worm
CD3C	7400C w/182TC Reducer, DE Worm
CD3D	CONE DRIVE 7400CReducer w/2.0HP AC 145TC Motor, DE Worm
CD3E	CONE DRIVE 7400CReducer w/3.0HP AC 182TC Motor, DE Worm
CD2F	CONE DRIVE 7400C Reducer w/ 2.0HP 180V DC 143TC Motor, DE Worm
CD2G	CONE DRIVE 7400C Reducer w/ 3.0HP 180V DC 145TC Motor, DE Worm
	SEW KH77 Motors
SW5A	Indexer with KH77 Adapter*
SW5H	SEW KH77DRN100L4 Reducer with 2.2Kw Motor (60Hz, 230/460V)
SW5J	SEW KH77DRN100L4 Reducer with 2.2Kw Motor (50Hz, 400V)
SW5K	SEW KH77DRN100L4 Reducer with 2.2Kw Motor (60Hz, 575V)
SW5L	SEW KH77DRN100L4 Reducer with 3.7Kw Motor (60Hz, 230/460V)
SW5M	SEW KH77DRN100L4 Reducer with 3.7Kw Motor (50Hz, 400V)
SW5N	SEW KH77DRN100L4 Reducer with 3.7Kw Motor(60Hz, 575V)
	SEW KH87 Motors
SW6A	Indexer with KH87 Adapter*
SW6B	SEW KH87DRN100L4 Reducer with 2.2Kw Motor/Brake Motor (60Hz, 230/460V)
SW6C	SEW KH87DRN100L4 Reducer with 2.2Kw Motor/Brake Motor (50Hz, 400V)
SW6D	SEW KH87DRN100L4 Reducer with 2.2Kw Motor/Brake Motor (60Hz, 575V)
SW6E	SEW KH87DRN100L4 Reducer with 3.7Kw Motor/Brake Motor (60Hz, 230/460V)
SW6F	SEW KH87DRN100L4 Reducer with 3.7Kw Motor/Brake Motor (50Hz, 400V)
SW6G	SEW KH87DRN100L4 Reducer with 3.7Kw Motor/Brake Motor (60Hz, 575V)
	STM RMI-150 Motors
RM8A	Indexer with RMI-150 Adapter*
RM8B	STM RMI-150/LFB/IEC100-B14 Reducer Only
RM8C	STM RMI-150/LFB/IEC112-B14 Reducer Only
RM8D	STM RMI-150/LFB Reducer with 2.2kW Motor
RM8E	STM RMI-150/LFB Reducer with 4.0kW Motor

*All Reducer/Motor adapters require Gear Ratio option to be 0.

2 Motor Brake*

Code	Description
000	No Brake
S1A	1.69 Nm (BE05)
S1B	2.49 Nm (BE05)
S1C	3.50 Nm (BE05)
S2A	4.97 Nm (BE1)
S2B	7.01 Nm (BE1)
S2C	9.94 Nm (BE1)
S3A	9.94 Nm (BE2)
S3B	14.01 Nm (BE2)
S3C	20.00 Nm (BE2)
S4A	20.00 Nm (BE5)
S4B	28.02 Nm (BE5)
S4C	40.00 Nm (BE5)
S4D	55.03 Nm (BE5)

*SEW Motor brake setting options only. All other motors use option code 000.

3 Reducer Gear Ratios*

Code	Description			
	7400C	SEW KH77	SEW KH87	STM RMI-150
0	N/A	N/A	N/A	N/A
A	10:1	9.56:1	10.00:1	10:1
B	15:1	15.84:1	14.45:1	15:1
C	20:1	20.25:1	19.45:1	20:1
D	25:1	29.27:1	31.39:1	28:1
E	30:1	40.04:1	36.52:1	40:1
F	40:1	51.18:1	49.16:1	49:1
G	50:1	58.34:1	63.00:1	56:1
H	60:1	73.99:1	70.46:1	70:1

*All Reducer/Motor adapters require Gear Ratio option to be 0.

Select Gear ratio column based on the reducer type selected.

4 Output Clutch & Settings

1800RDM Imperial Clutch Models

Code	Description
0000	No Output Overload Clutch
61DA	61D/23000 in-lb, Standard**
61DB	61D/36000 in-lb, Standard**
61DC	61D/44000 in-lb, Standard**
61DD	61D/50000 in-lb, Standard**
61DE	61D/60000 in-lb, Standard**
61DF	61D/23000 in-lb, Thru-Hole
61DG	61D/36000 in-lb, Thru-Hole
61DH	61D/44000 in-lb, Thru-Hole
61DJ	61D/50000 in-lb, Thru-Hole
61DK	61D/60000 in-lb, Thru-Hole
61EA	61D/23000 in-lb, Standard, EZ**
61EB	61D/36000 in-lb, Standard, EZ**
61EC	61D/44000 in-lb, Standard, EZ**
61ED	61D/50000 in-lb, Standard, EZ**
61EE	61D/60000 in-lb, Standard, EZ**
61EF	61D/23000 in-lb, Thru-Hole, EZ
61EG	61D/36000 in-lb, Thru-Hole, EZ
61EH	61D/44000 in-lb, Thru-Hole, EZ
61EJ	61D/50000 in-lb, Thru-Hole, EZ
61EK	61D/60000 in-lb, Thru-Hole, EZ

*Cannot be used with center post option P.

M1800RDM Metric Clutch Models

Code	Description
0000	No Output Overload Clutch
M61DA	M61D/2600 Nm, Standard**
M61DB	M61D/4070 Nm, Standard**
M61DC	M61D/4970 Nm, Standard**
M61DD	M61D/5650 Nm, Standard**
M61DE	M61D/6780 Nm, Standard**
M61DF	M61D/2600 Nm, Thru-Hole
M61DG	M61D/4070 Nm, Thru-Hole
M61DH	M61D/4970 Nm, Thru-Hole
M61DJ	M61D/5650 Nm, Thru-Hole
M61DK	M61D/6780 Nm, Thru-Hole
M61EA	M61D/2600 Nm, Standard, EZ**
M61EB	M61D/4070 Nm, Standard, EZ**
M61EC	M61D/4970 Nm, Standard, EZ**
M61ED	M61D/5650 Nm, Standard, EZ**
M61EE	M61D/6780 Nm, Standard, EZ**
M61EF	M61D/2600 Nm, Thru-Hole, EZ
M61EG	M61D/4070 Nm, Thru-Hole, EZ
M61EH	M61D/4970 Nm, Thru-Hole, EZ
M61EJ	M61D/5650 Nm, Thru-Hole, EZ
M61EK	M61D/6780 Nm, Thru-Hole, EZ

5 Motor Control

Code	Description	
000	NO MOTOR CONTROL	
A01	(AC) PowerFlex 523 1HP	120V 1Ph
A02		240V 1Ph
A03		480V 3Ph
A04	(AC) PowerFlex 525 1HP	120V 1Ph
A05		240V 1Ph
A06		480V 3Ph
A07	(AC) PowerFlex 523 2HP	240V 3Ph
A08		480V 3Ph
A09	(AC) PowerFlex 525 2HP	240V 3Ph
A10		480V 3Ph
A11	(AC) PowerFlex 523 3HP	240V 3Ph
A12		480V 3Ph
A13	(AC) PowerFlex 525 3HP	240V 1Ph
A14		480V 3Ph
A15	(AC) PowerFlex 523 5HP	480V 3Ph
A16		600V 3Ph
A17	(AC) PowerFlex 525 5HP	480V 3Ph
A18		600V 3Ph
D01	(DC) Varipak 1HP 90VDC	Uni-Directional
D02		Bi-Directional
D03	(DC) Varipak 2HP 180VDC	Uni-Directional
D04		Bi-Directional
D05	(DC) Cycletrol 3HP 180VDC	

Dimensions and technical information are subject to change without notice

Maximum Inertia x 1000 kg-cm² [lb-in²] for standard package							
Stops	Motion Time [seconds]						
	0.458	0.611	0.764	0.917	1.222	1.528	1.833
2	0 [0]	0 [0]	23 [8]	79 [27]	266 [91]	533 [182]	749 [256]
3	0 [0]	32 [11]	120 [41]	255 [87]	720 [246]	1381 [472]	1917 [655]
4	3 [1]	91 [31]	249 [85]	495 [169]	1332 [455]	2523 [862]	3488 [1192]
6	56 [19]	243 [83]	577 [197]	1097 [375]	2871 [981]	5390 [1842]	7439 [2542]
8	132 [45]	462 [158]	1056 [361]	1984 [678]	5133 [1754]	9616 [3286]	13257 [4530]
12	351 [120]	1100 [376]	2435 [832]	4518 [1544]	11606 [3966]	21690 [7412]	29881 [10211]
16	656 [224]	1987 [679]	4360 [1490]	8065 [2756]	20666 [7062]	38593 [13188]	53152 [18163]
Reducer Ratio							
	15	20	25	30	40	50	60

Other Motions (stops and index periods) available. Contact your DESTACO sales representative for more information.

Features

- 7400C Reducer (Ratios from 15:1 to 60:1)
- Double Extended Camshaft (Input Shaft)
- Center Thru Hole (Ø165,1 mm [Ø6.50 in.])
- 2 or 3 HP AC Drive Package with Inverter Duty Motor and Inverter Drive (up to 60 cpm)
- Cycle Cam and Limit Switch Mounted to Camshaft
- Right Hand Cam

Optional Accessories

- 2 hp DC Motor with Varipak DC Motor Control (up to 30 cpm)
- 3 hp DC Motor
- 7500C Heavy Duty Reducer (Ratios from 10:1 to 60:1)
- Output Mechanical Overload Clutch – See Page 39
- EZ Mount Dial Adapter
- Stationary Center Post
- Dual Cam and Limit Switch
- Base Riser Blocks
- Electric Clutch-Brake
- Left Hand Cam
- Relief in Dwell for shot-pin applications

Output Load Capacity (loads carried during index):

Radial	26022 N [5850 lbs]
Thrust/Axial	61166 N [14650 lbs]
Moment	7696 N-m [68119 in-lb]

Typical Application Dial Diameter:	660 mm [26 in] to 1829 mm [96 in]
Accuracy	±27 arcsec / ±0,15 mm [±.006in] at 1219,2 mm [48in] Radius
Repeatability	±7 arcsec / ±0,041 mm [±.0016in] at 1219,2 mm [48in] Radius

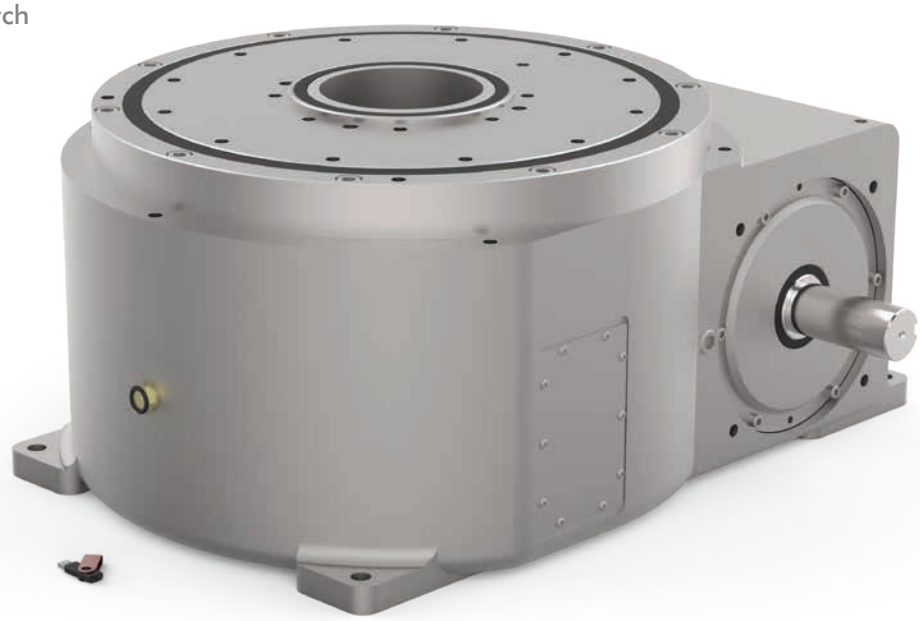

1800RDM SERIES

Rotary Index Drive | Dimensions

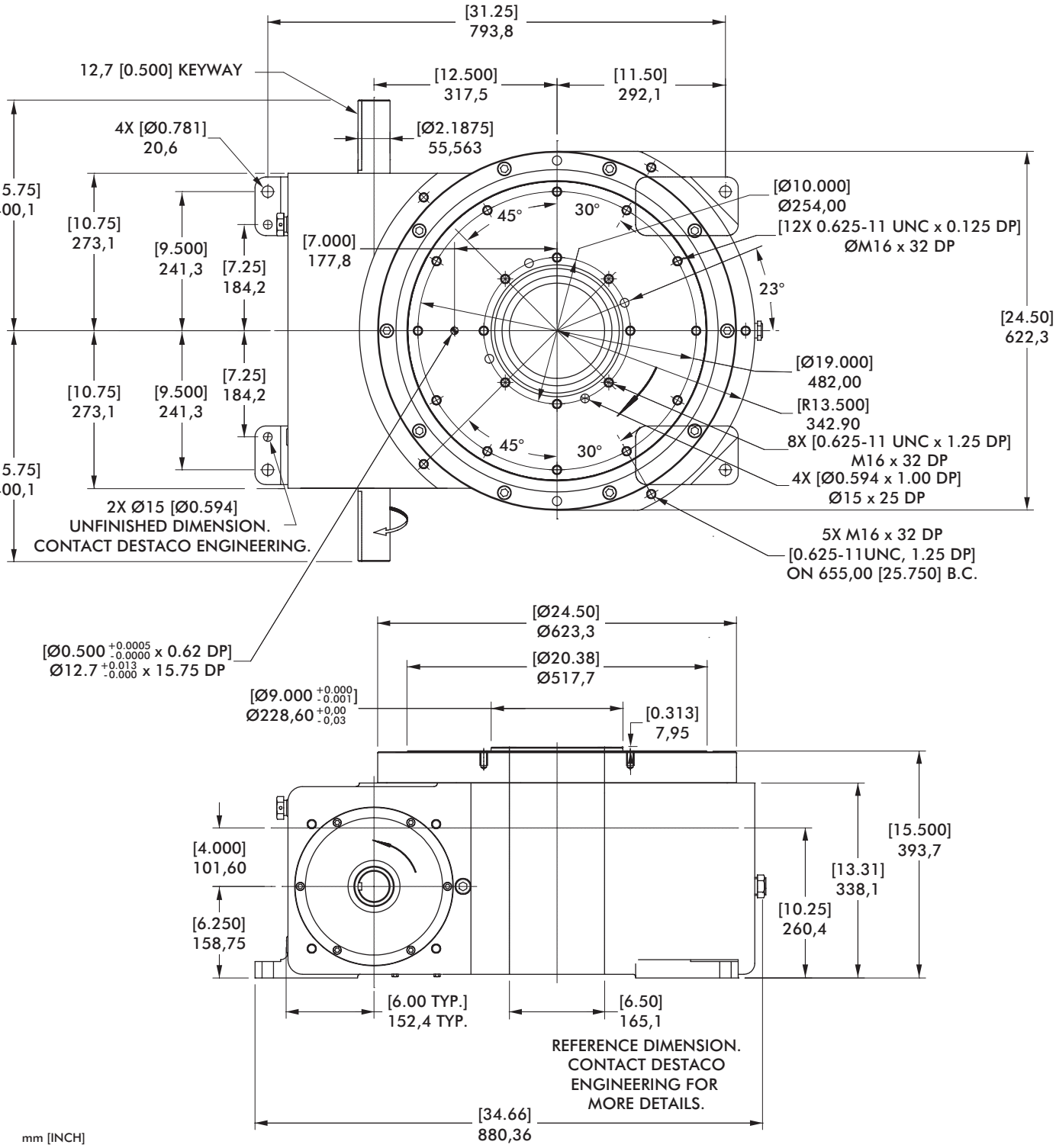

Dimensions and technical information are subject to change without notice

Center Post

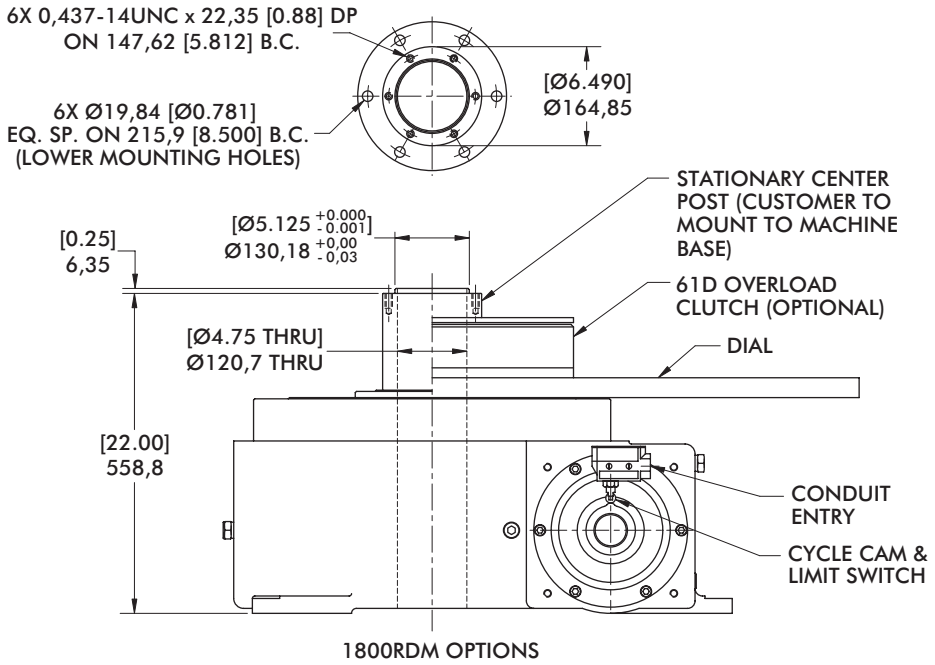

1800RDM OPTIONS

mm [INCH]

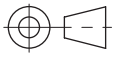

THIRD ANGLE PROJECTION

Proximity Switch

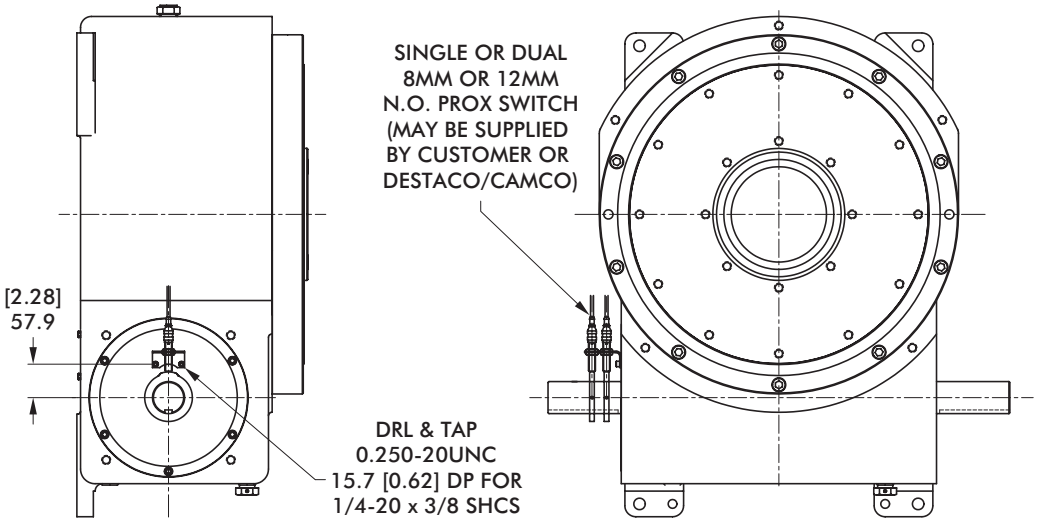

1800RDM SERIES

Rotary Index Drive | Dimensions

61D Overload Clutch

THRU-HOLE CLUTCH

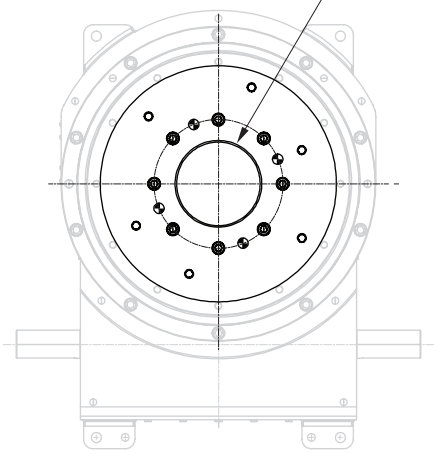

STANDARD CLUTCH

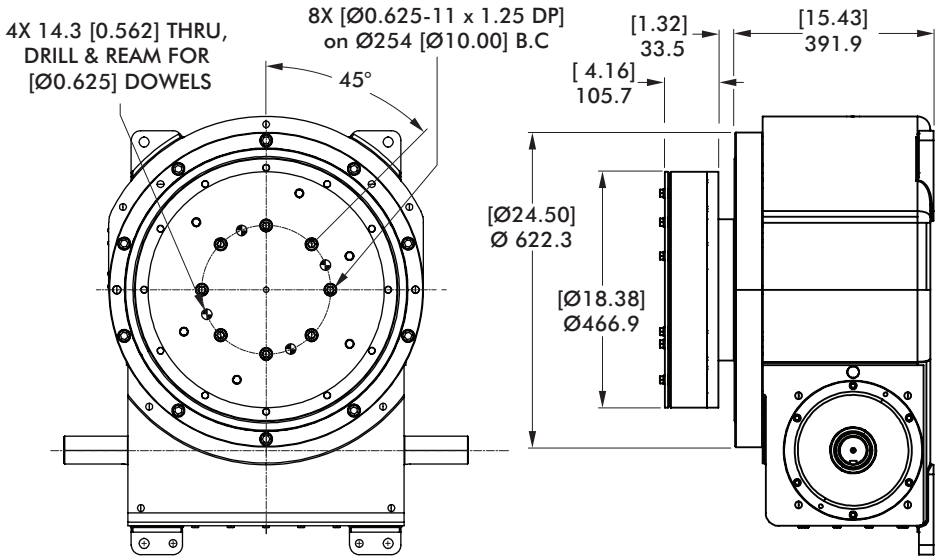

mm [INCH]

THIRD ANGLE PROJECTION

61D Overload Clutch with EZ Dial Mounting Adapter

THRU-HOLE EZ CLUTCH

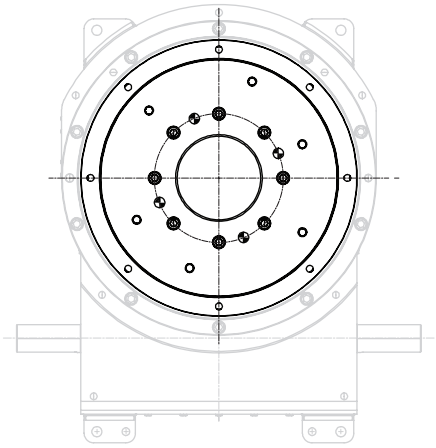

STANDARD EZ CLUTCH

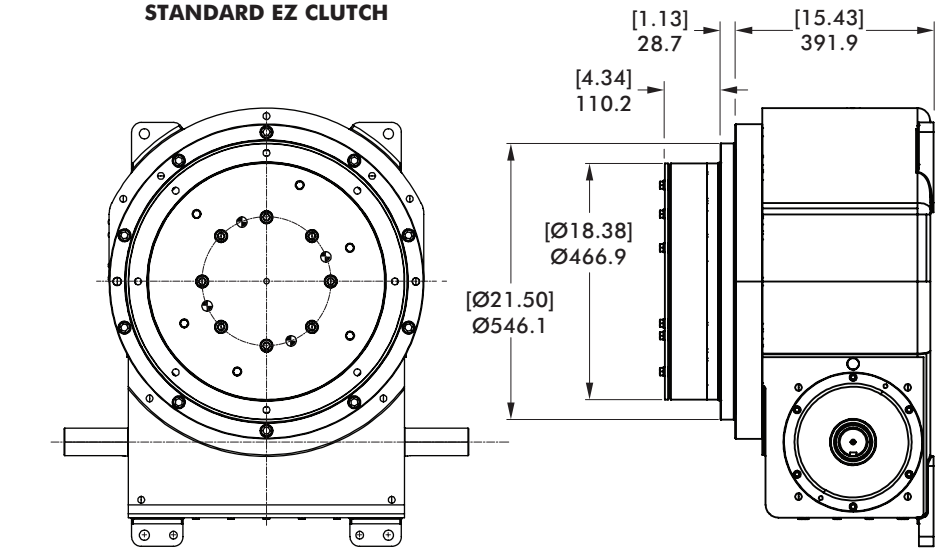

Model	Internal Inertia kg-m² [lb-in²]	Torque Setting N-m [in-lb]
61D	345 [4900]	2599, 4067, 4971, 5649, 6779 [23000, 36000, 44000, 50000, 60000]

Dimensions and technical information are subject to change without notice

Notes

PRECISION INDEXING SOLUTIONS

Table of Contents

INDEXERS

Servo Positioners

GTB Series
Globoidal (Roller Gear)
Servo Positioner.....IN-SRV-1

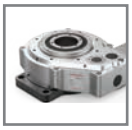

PGM Series
Parallel Gear Servo Positioner...IN-SRV-19

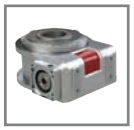

RSD Series
Rotary Servo Drives.....IN-SRV-25

Mechanical Indexers

RDM Series
Rotary Index Drive IN-MCH-1

RD Series
Roller Dial Index Drive..... IN-MCH-42

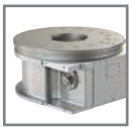

E Series
Heavy-Duty Index Drive IN-MCH-54

RA Series
Right Angle Index Drive IN-MCH-66

RGD/RGS Series
Roller Gear Index Drive IN-MCH-76

P Series
Parallel Shaft/Flange Drive.... IN-MCH-96

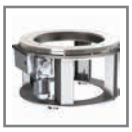

RNG Series
Ring Drive Dial Indexer.. IN-MCH-108

OVERLOAD CLUTCHES

Overload Clutches
Output Overload..... IN-CLU-1

CUSTOM CAMS

Custom Cams
Cam Design Solutions IN-CAM-1

CONVEYORS

Rite-Link Series
Thin-Profile..... IN-CNV-1

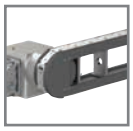

Precision Link Series
Table-Top IN-CNV-4

Precision Link Series
Heavy-Duty IN-CNV-16

PARTS HANDLERS

LPP Series
Linear Part Handlers IN-PRT-2

RPP Series
Rotary Part Handlers IN-PRT-8

Dimensions and technical information are subject to change without notice

Features:

CAMCO Roller Dial Index Drives have a robust, flexible design with superior load capabilities. Other features include:

Short camshaft motion periods, due to oversized roller gear cam design, are well suited for continuous running applications or for special motion requirements such as oscillating motions

Universal mounting including a horizontal mounting ideal for trunnion applications

Option Center Thru-Hole facilitates passage of electrical wiring, pneumatic lines or mechanical linkages

Optional Stationary Center Post with thru-hole provides mounting for upper tool plate

Table of Contents

How to Order 43

425RD 45

800RD 51

1301RD 57

1801RD 63

RD SERIES

Roller Dial Index Drives | How To Order

Base Model

Imperial	Metric	Option Tables Page #
425RD	M425RD	45
800RD	M800RD	51
1301RD	M1301RD	57
1801RD		63

Indexer Mounting (See Figure 1)

1
2
3
4
5
6

Reducer/Motor (Table 2 on Datasheets)

Note: Set Reducer Mounting option to 0 when Reducer/Motor option is 0000.

Reducer Mounting (See Figure 2)

0 = No Reducer

A	J
B	K
C	L
D	M
E	N
F	P
G	R
H	S

Cycling Sensor (See Figure 3) Description

0 = No Sensors

A	Single Cam w/PNP Prox
B	Single Cam w/NPN Prox
C	Dual Cam w/PNP Prox
D	Dual Cam w/NPN Prox
E	Single Cam/Prox Bracket
F	Dual Cam/Prox Bracket
G	Single Cam, w/Mech LS
H	Dual Cam, w/Mech LS

800RD C 1 T - XXX - 000 - C L - A 40EA

Motion (Table 1)

Output Configuration

0 = No Thru-Hole

T = with Thru-Hole

P = Thru Hole + Center Post*

*not available for 425RD

Motor Brake Settings

000 = No Motor Brake

Reducer Gear Ratio (Table 3 on Datasheets)

Output Clutch (Table 4 on Datasheets)

No Thru-Hole Option 0 | with Thru-Hole Option T | Thru-Hole + Center Post Option P

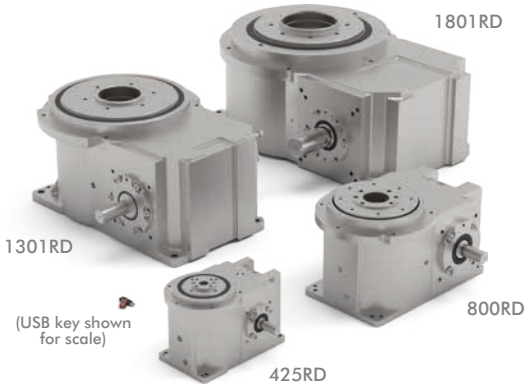

Input Shaft Configuration/Rotation

Relative Rotation for Right Hand Cam:

Side 1: CW Input, CCW Output

Side 2: CCW input, CW Output

NOTE: Input can be driven in either direction. Reducer, Motor and adapter plates can be mounted on either side 1 or side 2 to drive input.

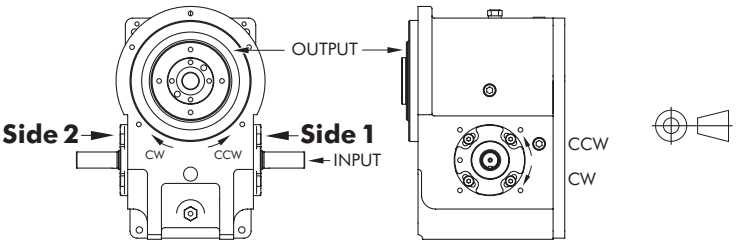

Index Mounting (Figure 1)

OVOI (output vertical, over input)	OVUI (output vertical, under input)	OHOI (output horizontal, over input)	OHUI (output horizontal, under input)	H-S1-UP (output horizontal, side 1 up)	H-S2-UP (output horizontal, side 2 up)
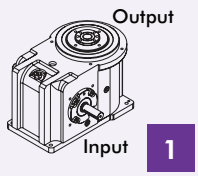	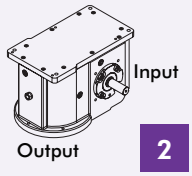	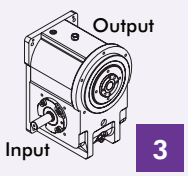	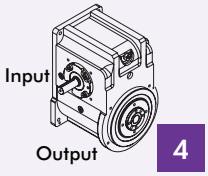	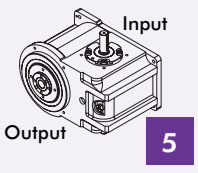	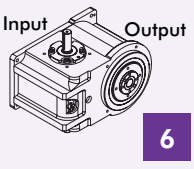

Other Motions (stops and index periods) available. Contact your DESTACO sales representative for more information.

Dimensions and technical information are subject to change without notice

Gear Reducer Mounting Positions (Figure 2)

	Mounting "A"		Mounting "B"	
	Right Hand	Left Hand	Right Hand	Left Hand
SIDE 1	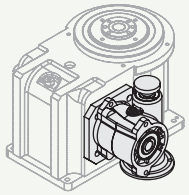 A	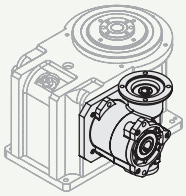 B	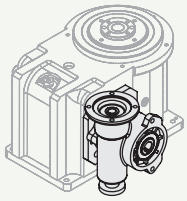 C	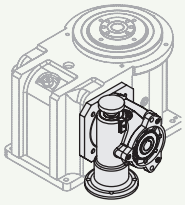 D
SIDE 2	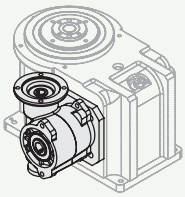 E	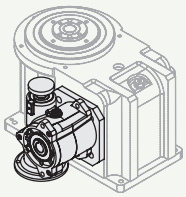 F	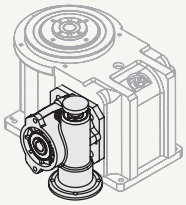 G	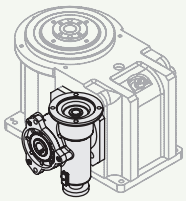 H

	Mounting "C"		Mounting "D"	
	Right Hand	Left Hand	Right Hand	Left Hand
SIDE 1	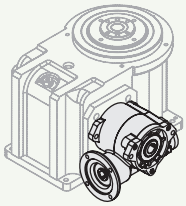 J	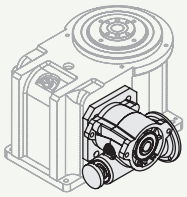 K	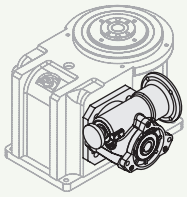 L	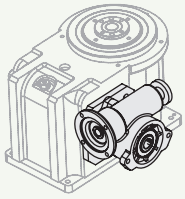 M
SIDE 2	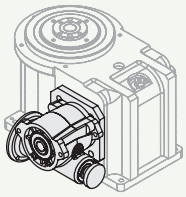 N	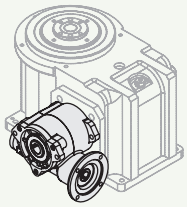 P	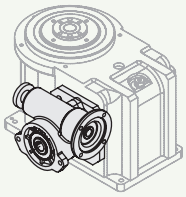 R	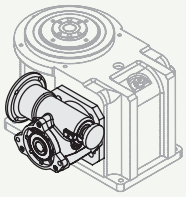 S

Cycling Sensor Options (Figure 3)

Single Cam with (A) PNP or (B) NPN Proximity Sensor	Dual Cam with (A) PNP or (B) NPN Proximity Sensor	Single Cam with Proximity Sensor Bracket	Dual Cam with Proximity Sensor Bracket	Single Cam with Mechanical Limit Switch	Dual Cam with Mechanical Limit Switch
A B	C D	E	F	G	H

425RD SERIES

Roller Dial Index Drives | How To Order

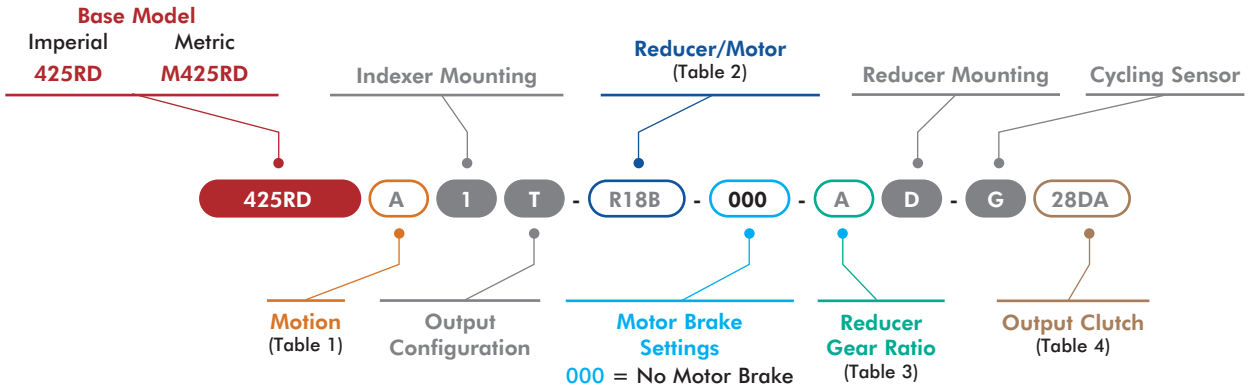

X = See Page 43 for option information.

1 Motion

Code	Description
A	2-Stop-330
B	3-Stop-180
C	3-Stop-270
D	3-Stop-330
E	4-Stop-180
F	4-Stop-270
G	4-Stop-330
H	6-Stop-180
J	6-Stop-270
K	6-Stop-330
L	8-Stop-180
M	8-Stop-270
N	8-Stop-330
P	12-Stop-180
R	12-Stop-270
S	12-Stop-330

2 Reducer/Motor Options

Code	Description
0000	No Reducer or Motor*
	R180 Reducers/Motors
R18A	Reducer, no motor
R18B	Reducer with 0.33HP 230/460V AC Motor
R18C	Reducer with 0.33HP 90V DC Motor
R18D	Reducer with 0.33HP 180V DC Motor
	R225 Reducers/Motors
R2SA	Reducer w/56 Adapter & CPLG, SE Worm
R2SB	Reducer w/145TC Adapter & CPLG, SE Worm
R2SC	Reducer w/0.5HP 56C 230/460V AC Motor, SE Worm
R2SD	Reducer w/1.0HP 56C 230/460V AC Motor, SE Worm
R2SE	Reducer w/1.0HP 56C 90V DC Motor, SE Worm
R2SF	Reducer w/1.0HP 143TC 180V DC Motor, SE Worm
R2DA	Reducer w/56 Adapter & CPLG only, DE Worm
R2DB	Reducer w/145TC Adapter & CPLG only, DE Worm
R2DC	Reducer w/0.5HP 56C 230/460V AC Motor, DE Worm
R2DD	Reducer w/1.0HP 56C 230/460V AC Motor, DE Worm
R2DE	Reducer w/1.0HP 56C 90V DC Motor, DE Worm
R2DF	Reducer w/1.0HP 143TC 180V DC Motor, DE Worm

*All Reducer/Motor Adapters require Gear Ratio option to be 0.

3 Reducer Gear Ratios*

Code	Description
0	N/A
A	10:1
B	15:1
C	20:1
D	25:1
E	30:1
F	40:1
G	50:1
H	60:1

* Select 0 when Reducer/Motor code is 0000. Must Select a Gear Ratio when a Reducer option is selected in Table 2.

4 Output Clutch & Settings

425RD Imperial Clutch Models		M425RD Metric Clutch Models	
Code	Description	Code	Description
0000	No Overload Clutch	0000	No Overload Clutch
	28D Clutch		**M28D Clutch**
28DA	2.8D 480 in-lb, Standard*	M28DA	M2.8D/54 Nm, Standard*
28DB	2.8D 850 in-lb, Standard*	M28DB	M2.8D/96 Nm, Standard*
28DC	2.8D 1300 in-lb, Standard*	M28DC	M2.8D/147 Nm, Standard*
28DD	2.8D 2200 in-lb, Standard*	M28DD	M2.8D/249 Nm, Standard*
28DE	2.8D 3100 in-lb, Standard*	M28DE	M2.8D/350 Nm, Standard*
28DF	2.8D 400 in-lb, Standard*	M28DF	M2.8D/45 Nm, Standard*
28DG	2.8D 700 in-lb, Standard*	M28DG	M2.8D/79 Nm, Standard*
28DH	2.8D 1100 in-lb, Standard*	M28DH	M2.8D/124 Nm, Standard*
28DJ	2.8D 1800 in-lb, Standard*	M28DJ	M2.8D/203 Nm, Standard*
28DK	2.8D 480 in-lb, Thru-Hole	M28DK	M2.8D/54 Nm, Thru-Hole
28DL	2.8D 850 in-lb, Thru-Hole	M28DL	M2.8D/96 Nm, Thru-Hole
28DM	2.8D 1300 in-lb, Thru-Hole	M28DM	M2.8D/147 Nm, Thru-Hole
28DN	2.8D 2200 in-lb, Thru-Hole	M28DN	M2.8D/249 Nm, Thru-Hole
28DP	2.8D 3100 in-lb, Thru-Hole	M28DP	M2.8D/350 Nm, Thru-Hole
28DQ	2.8D 400 in-lb, Thru-Hole	M28DQ	M2.8D/45 Nm, Thru-Hole
28DR	2.8D 700 in-lb, Thru-Hole	M28DR	M2.8D/79 Nm, Thru-Hole
28DS	2.8D 1100 in-lb, Thru-Hole	M28DS	M2.8D/124 Nm, Thru-Hole
28DT	2.8D 1800 in-lb, Thru-Hole	M28DT	M2.8D/203 Nm, Thru-Hole
	78E EZ Clutch		**M78E EZ Clutch**
28EA	2.8D 480 in-lb, Standard, EZ*	M28EA	M2.8D/54 Nm, Standard, EZ*
28EB	2.8D 850 in-lb, Standard, EZ*	M28EB	M2.8D/96 Nm, Standard, EZ*
28EC	2.8D 1300 in-lb, Standard, EZ*	M28EC	M2.8D/147 Nm, Standard, EZ*
28ED	2.8D 2200 in-lb, Standard, EZ*	M28ED	M2.8D/249 Nm, Standard, EZ*
28EE	2.8D 3100 in-lb, Standard, EZ*	M28EE	M2.8D/350 Nm, Standard, EZ*
28EF	2.8D 400 in-lb, Standard, EZ*	M28EF	M2.8D/45 Nm, Standard, EZ*
28EG	2.8D 700 in-lb, Standard, EZ*	M28EG	M2.8D/79 Nm, Standard, EZ*
28EH	2.8D 1100 in-lb, Standard, EZ*	M28EH	M2.8D/124 Nm, Standard, EZ*
28EJ	2.8D 1800 in-lb, Standard, EZ*	M28EJ	M2.8D/203 Nm, Standard, EZ*
28EK	2.8D 480 in-lb, Thru-Hole, EZ	M28EK	M2.8D/54 Nm, Thru-Hole, EZ
28EL	2.8D 850 in-lb, Thru-Hole, EZ	M28EL	M2.8D/96 Nm, Thru-Hole, EZ
28EM	2.8D 1300 in-lb, Thru-Hole, EZ	M28EM	M2.8D/147 Nm, Thru-Hole, EZ
28EN	2.8D 2200 in-lb, Thru-Hole, EZ	M28EN	M2.8D/249 Nm, Thru-Hole, EZ
28EP	2.8D 3100 in-lb, Thru-Hole, EZ	M28EP	M2.8D/350 Nm, Thru-Hole, EZ
28EQ	2.8D 400 in-lb, Thru-Hole, EZ	M28EQ	M2.8D/45 Nm, Thru-Hole, EZ
28ER	2.8D 700 in-lb, Thru-Hole, EZ	M28ER	M2.8D/79 Nm, Thru-Hole, EZ
28ES	2.8D 1100 in-lb, Thru-Hole, EZ	M28ES	M2.8D/124 Nm, Thru-Hole, EZ
28ET	2.8D 1800 in-lb, Thru-Hole, EZ	M28ET	M2.8D/203 Nm, Thru-Hole, EZ

EZ Clutch allows for direct mounting and removal of application dial plate onto the EZ flange without removing clutch.

*Clutch has a solid plate cover and not compatible with Output Configuration options T and P. See page 43.

Maximum Inertia x 1000 kg-cm² [lb-in²] for standard package							
Stops	Motion Time [seconds]						
	0.458	0.611	0.764	0.917	1.222	1.528	1.833
2	0 [0]	3 [1]	6 [2]	12 [4]	32 [11]	47 [16]	64 [22]
3	3 [1]	6 [2]	18 [6]	32 [11]	73 [25]	108 [37]	146 [50]
4	3 [1]	15 [5]	29 [10]	56 [19]	129 [44]	193 [66]	263 [90]
6	12 [4]	32 [11]	70 [24]	129 [44]	293 [100]	439 [150]	457 [156]
8	20 [7]	59 [20]	126 [43]	231 [79]	457 [156]	457 [156]	457 [156]
12	47 [16]	132 [45]	260 [89]	398 [136]	430 [147]	430 [147]	430 [147]
Reducer Ratio							
	15	20	25	30	40	50	60

Features

- R180 Reducer (ratios from 15:1 to 60:1)
  - Double Extended Worm Shaft (Input)
  - Worm Shaft Handwheel
- Double Extended Camshaft (Input Shaft)
- 1/3 HP AC Drive Package with Inverter Duty Motor (up to 60 cpm)
- R225 Reducer with 1 HP AC or DC Motor (ratios of 5:1 to 60:1)
- Cycle Cam and Limit Switch Mounted to Camshaft
- Right Hand Cam

Optional Accessories

- 1/3 hp DC Motor
- DC Motor Control (up to 30 cpm)
- 2.8D Output Overload Clutch
  - Available Settings (in-lbs): 400, 480, 700, 850, 1100, 1300, 1800, 2200, 3100
- Center Thru Hole (0.81 in. Diameter)
- Stationary Center Post
- Dual Cam and Limit Switch
- Left Hand Cam
- Relief in Dwell for shot-pin applications
- Universal Mounting Capability
- Custom Dial Plate

Output Load Capacity (loads carried during index):

Radial	12010 N [2700 lbs]
Thrust/Axial	717 N [1600 lbs]
Moment	655 N-m [5800 in-lbs]

Accuracy ±47 arcsec / ±0,025 mm [±.0027 in] at 304,8 mm [12 in] Radius

Repeatability ±12 arcsec / ±0,018 mm [±.0007 in] at 304,8 mm [12 in] Radius

425RD SERIES

Roller Dial Index Drives | Dimensions

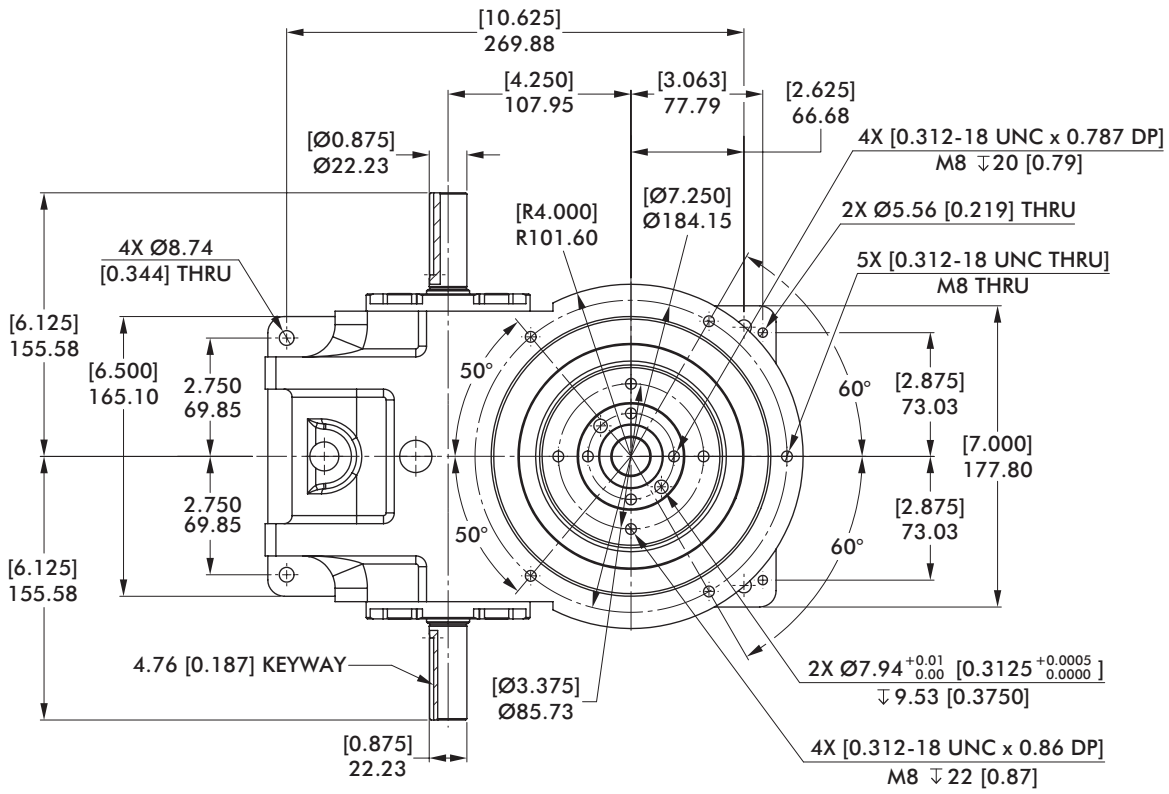

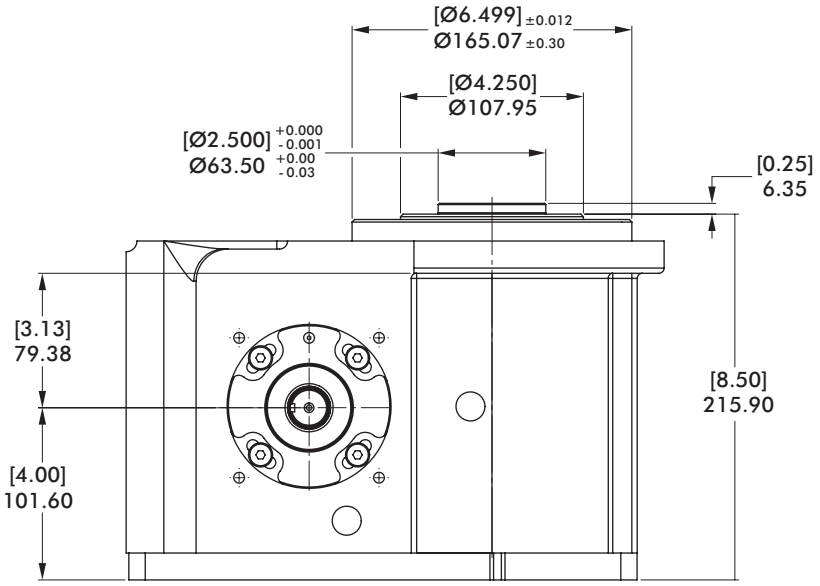

mm [INCH]

THIRD ANGLE PROJECTION

Dimensions and technical information are subject to change without notice

Center Post

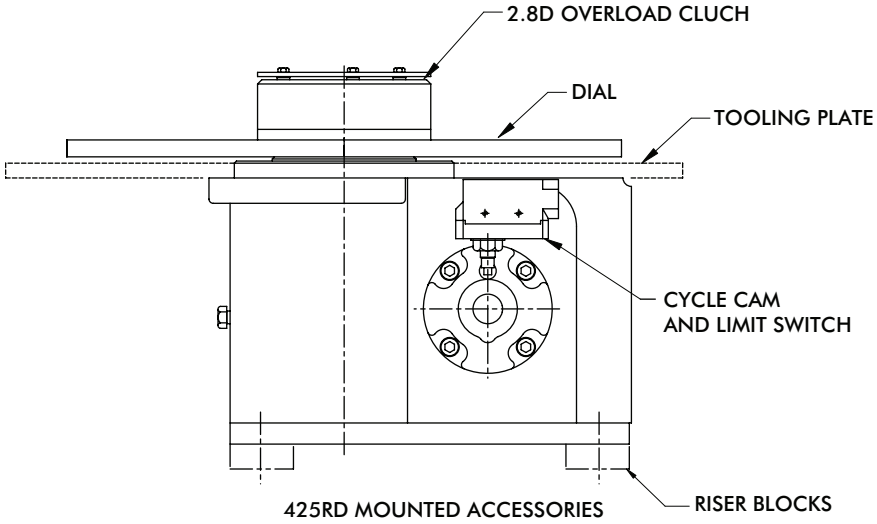

mm [INCH]

THIRD ANGLE PROJECTION

Proximity Switch

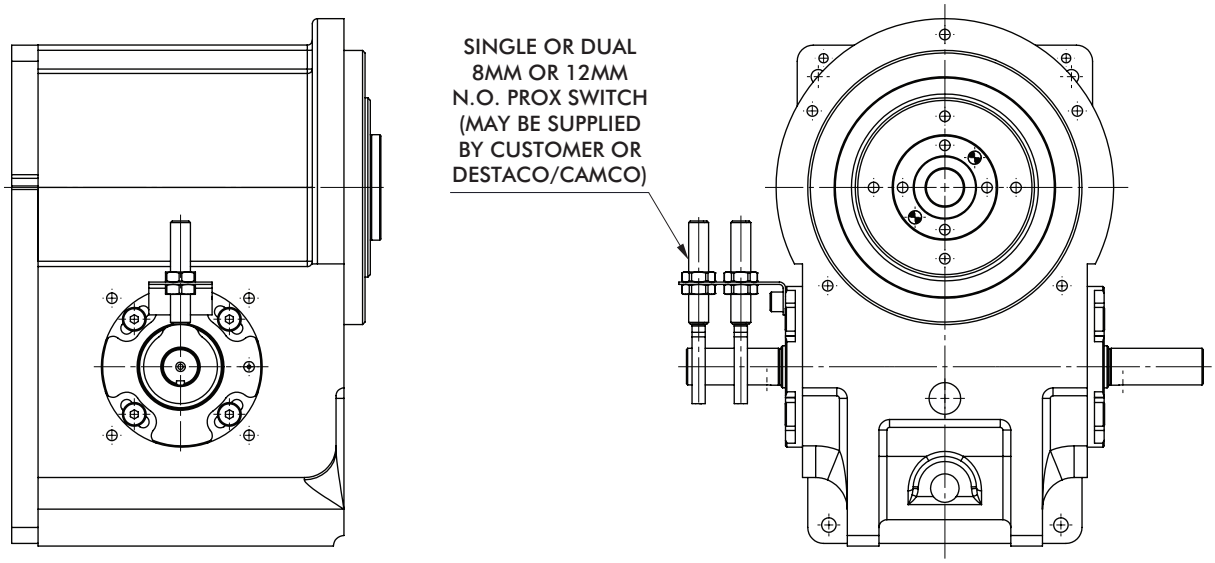

425RD SERIES

Roller Dial Index Drives | Dimensions

2.8D Overload Clutch

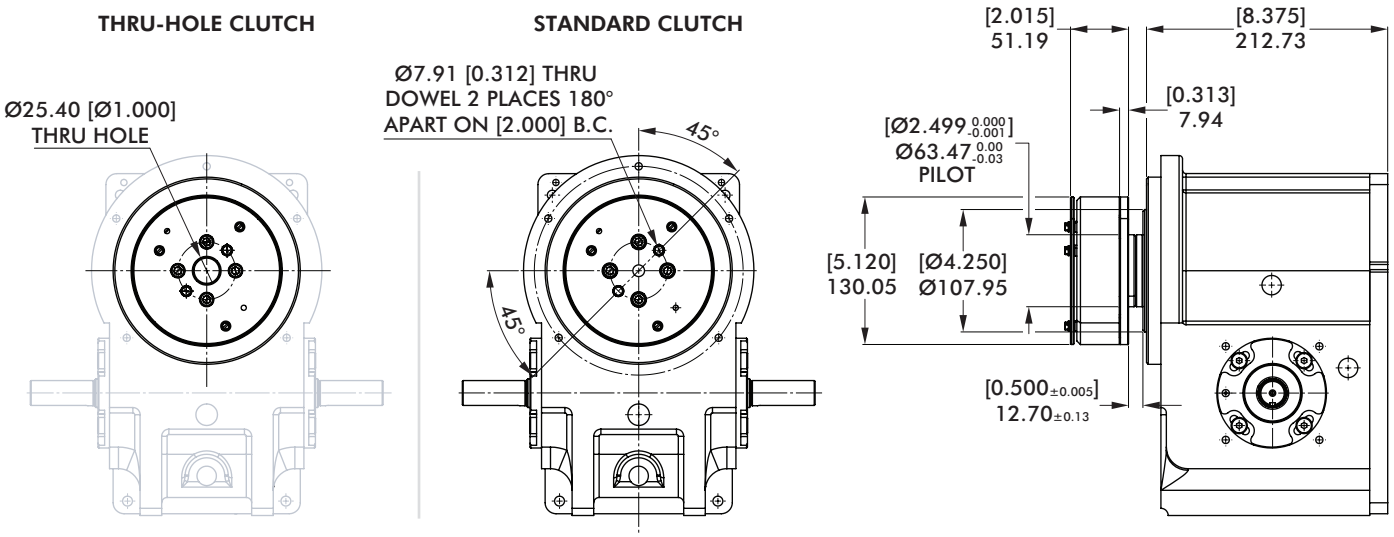

mm [INCH]

THIRD ANGLE PROJECTION

2.8E Overload Clutch with EZ Dial Mounting Adapter

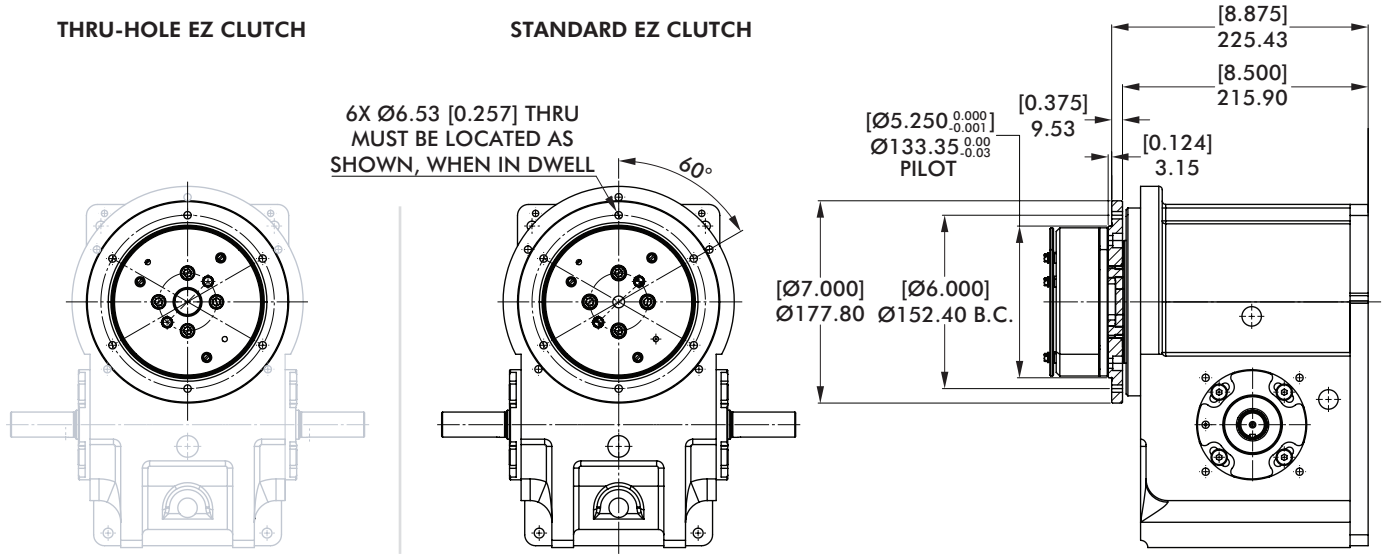

Model	Internal Inertia kg-m² [lb-in²]	Torque Setting N-m [in-lb]
2.8D/2.8E	0,0085 [29]	45, 54, 79, 96, 124, 147, 203, 249, 350 [400, 480, 700, 850, 1100, 1300, 1800, 2200, 3100]

Notes

800RD SERIES

Roller Dial Index Drives | Dimensions

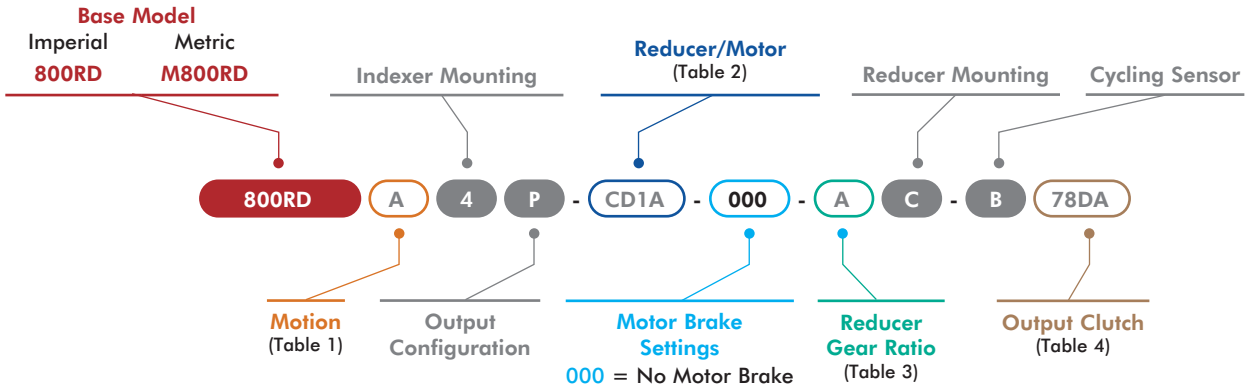

X = See Page 43 for option information.

1 Motion

Code	Description
A	2-Stop-270
B	2-Stop-330
C	3-Stop-270
D	3-Stop-330
E	4-Stop-180
F	4-Stop-270
G	4-Stop-330
H	6-Stop-180
J	6-Stop-270
K	6-Stop-330
L	8-Stop-180
M	8-Stop-270
N	8-Stop-330
P	12-Stop-180
R	12-Stop-270
S	12-Stop-330
T	16-Stop-180
U	16-Stop-270
V	24-Stop-180
W	24-Stop-270
X	6:1
Y	8:1
Z	12:1

2 Reducer/Motor Options

Code	Description
0000	No Reducer or Motor*
	Cone Drive 7300C Drive Configurations
CD1A	Indexer w/7300C Adapter
CS1B	Reducer w/56C Motor Adapter, SE Worm
CS1C	Reducer w/145TC Motor Adapter, SE Worm
CS1D	Reducer w/1.0HP AC 56C Motor, SE Worm
CS1E	Reducer w/2.0HP AC 145TC Motor, SE Worm
CS1F	Reducer w/1.0HP 90V DC 56C Motor, SE Worm
CS1G	Reducer w/1.0HP 180V DC 56C Motor, SE Worm
CS1H	Reducer w/2.0HP 180V DC 143TC Motor, SE Worm
CD1B	Reducer w/56C Motor Adapter, DE Worm
CD1C	Reducer w/145TC Motor Adapter, DE Worm
CD1D	Reducer w/1.0HP AC 56C Motor, DE Worm
CD1E	Reducer w/2.0HP AC 145TC Motor, DE Worm
CD1F	Reducer w/1.0HP 90V DC 56C Motor, DE Worm
CD1G	Reducer w/1.0HP 180V DC 56C Motor, DE Worm
CD1H	Reducer w/2.0HP 180V DC 143TC Motor, DE Worm
	Cone Drive 7350C Drive Configurations
CD2A	Indexer w/7350C Adapter
CS2B	Reducer w/56C Motor Adapter, SE Worm
CS2C	Reducer w/145TC Motor Adapter, SE Worm
CS2D	Reducer w/1.0HP AC 56C Motor, SE Worm
CS2E	Reducer w/2.0HP AC 145TC Motor, SE Worm
CS2F	Reducer w/1.0HP 90V DC 56C Motor, SE Worm
CS2G	Reducer w/1.0HP 180V DC 56C Motor, SE Worm
CS2H	Reducer w/2.0HP 180V DC 143TC Motor, SE Worm
CD2B	Reducer w/56C Motor Adapter, DE Worm
CD2C	Reducer w/145TC Motor Adapter, DE Worm
CD2D	Reducer w/1.0HP AC 56C Motor, DE Worm
CD2E	Reducer w/2.0HP AC 145TC Motor, DE Worm
CD2F	Reducer w/1.0HP 90V DC 56C Motor, DE Worm
CD2G	Reducer w/1.0HP 180V DC 56C Motor, DE Worm
CD2H	Reducer w/2.0HP 180V DC 143TC Motor, DE Worm

*All Reducer/Motor Adapters require Gear Ratio option to be 0.

3 Reducer Gear Ratios*

Code	Description
0	N/A
A	10:1
B	15:1
C	20:1
D	25:1
E	30:1
F	40:1
G	50:1
H	60:1

* Select 0 when Reducer/Motor code is 0000. Must Select a Gear Ratio when a Reducer option is selected in Table 2.

4 Output Clutch & Settings

800RD Imperial Clutch Models

Code	Description
0000	No Overload Clutch
	78D Clutch
78DA	3200 in-lb*
78DB	7200 in-lb*
78DC	10000 in-lb*
78DD	1400 in-lb*
78DE	1700 in-lb*
78DF	2600 in-lb*
78DG	4200 in-lb*
78DH	5000 in-lb*
78DJ	3200 in-lb w/Thru-Hole
78DK	7200 in-lb w/Thru-Hole
78DC	10000 in-lb w/Thru-Hole
78DM	1400 in-lb w/Thru-Hole
78DN	1700 in-lb w/Thru-Hole
78DP	2600 in-lb w/Thru-Hole
78DQ	4200 in-lb w/Thru-Hole
78DR	5000 in-lb w/Thru-Hole
	78E EZ Clutch
78EA	3200 in-lb, EZ*
78EB	7200 in-lb, EZ*
78EC	10000 in-lb, EZ*
78ED	1400 in-lb, EZ*
78EE	1700 in-lb, EZ*
78EF	2600 in-lb, EZ*
78EG	4200 in-lb, EZ*
78EH	5000 in-lb, EZ*
78EJ	3200 in-lb w/Thru-Hole, EZ
78EK	7200 in-lb w/Thru-Hole, EZ
78EC	10000 in-lb w/Thru-Hole, EZ
78EM	1400 in-lb w/Thru-Hole, EZ
78EN	1700 in-lb w/Thru-Hole, EZ
78EP	2600 in-lb w/Thru-Hole, EZ
78EQ	4200 in-lb w/Thru-Hole, EZ
78ER	5000 in-lb w/Thru-Hole, EZ

M800RD Metric Clutch Models

Code	Description
0000	No Overload Clutch
	M78D Clutch
M78DA	360 Nm*
M78DB	815 Nm*
M78DC	1130 Nm*
M78DD	160 Nm*
M78DE	192 Nm*
M78DF	295 Nm*
M78DG	475 Nm*
M78DH	566 Nm*
M78DJ	360 Nm w/Thru-Hole
M78DK	815 Nm w/Thru-Hole
M78DC	1130 Nm w/Thru-Hole
M78DM	160 Nm w/Thru-Hole
M78DN	192 Nm w/Thru-Hole
M78DP	295 Nm w/Thru-Hole
M78DQ	475 Nm w/Thru-Hole
M78DR	566 Nm w/Thru-Hole
	M78E EZ Clutch
M78EA	360 Nm, EZ*
M78EB	815 Nm, EZ*
M78EC	1130 Nm, EZ*
M78ED	160 Nm, EZ*
M78EE	192 Nm, EZ*
M78EF	295 Nm, EZ*
M78EG	475 Nm, EZ*
M78EH	566 Nm, EZ*
M78EJ	360 Nm w/Thru-Hole, EZ
M78EK	815 Nm w/Thru-Hole, EZ
M78EC	1130 Nm w/Thru-Hole, EZ
M78EM	160 Nm w/Thru-Hole, EZ
M78EN	192 Nm w/Thru-Hole, EZ
M78EP	295 Nm w/Thru-Hole, EZ
M78EQ	475 Nm w/Thru-Hole, EZ
M78ER	566 Nm w/Thru-Hole, EZ

EZ Clutch allows for direct mounting and removal of application dial plate onto the EZ flange without removing clutch.

*Clutch has a solid plate cover and not compatible with Output Configuration options T and P. See page 43.

Maximum Inertia x 1000 kg-cm² [lb-in²] for standard package							
Stops	Motion Time [seconds]						
	0.458	0.611	0.764	0.917	1.222	1.528	1.833
2	6 [2]	23 [8]	50 [17]	94 [32]	161 [55]	243 [83]	334 [114]
3	20 [7]	56 [19]	117 [40]	211 [72]	366 [125]	547 [187]	755 [258]
4	38 [13]	102 [35]	211 [72]	380 [130]	653 [223]	977 [334]	1343 [459]
6	88 [30]	231 [79]	480 [164]	857 [293]	1475 [504]	2204 [753]	3026 [1034]
8	158 [54]	416 [142]	855 [292]	1525 [521]	2625 [897]	3605 [1232]	3605 [1232]
12	360 [123]	913 [312]	1528 [522]	2324 [794]	3383 [1156]	3383 [1156]	3383 [1156]
Reducer Ratio							
	15	20	25	30	40	50	60

Features

- 7300C Reducer (Ratios from 15:1 to 60:1)
  - Double Extended Worm Shaft (Input)
  - Motor Adapter and Coupling
- Double Extended Camshaft (Input Shaft)
- 1 HP AC Drive Package with Inverter Duty Motor (up to 60 cpm)
- Cycle Cam and Limit Switch Mounted to Camshaft
- Right Hand Cam

Optional Accessories

- 7350C Reducer (ratios from 5:1 to 60:1) with 1 hp AC or DC Motor
- 1 hp DC Motor
- DC Motor Control (up to 30 cpm)
- Output Overload Clutch model 7.8D
  - Available Settings (in-lbs): 1400, 1700, 2600, 3200, 4200, 5000, 7200, 10,000
- Output Overload Clutch model 18D
  - Available Settings (in-lbs): 5000, 7000, 7800, 10,000, 12,000, 16,000, 19,000, 21,000, 27,000, 42,000, 45,000
- Center Thru Hole (2.50 in. Diameter)
- Stationary Center Post
- Dual Cam and Limit Switch
- Left Hand Cam
- Relief in Dwell for shot-pin applications
- Universal Mounting Capability
- Custom Dial Plate

Output Load Capacity (loads carried during index):

Radial	22139 N [4977 lbs]
Thrust/Axial	15840 N [3561 lbs]
Moment	2531 N-m [22398 in-lbs]

Accuracy ±30 arcsec / ±0,102 mm [±.004 in] at 609,6 mm [24 in] Radius

Repeatability ±8 arcsec / ±0,023 mm [±.0009 in] at 609,6 mm [24 in] Radius

800RD SERIES

Roller Dial Index Drives | Dimensions

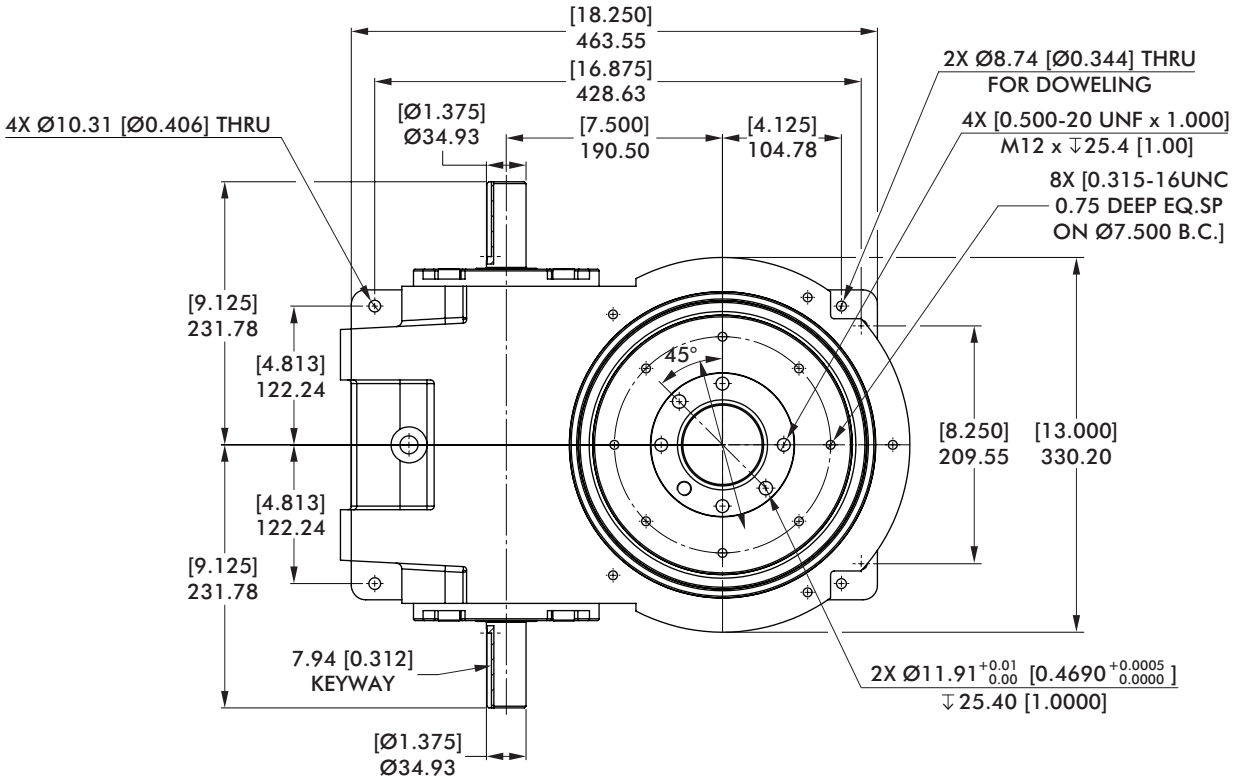

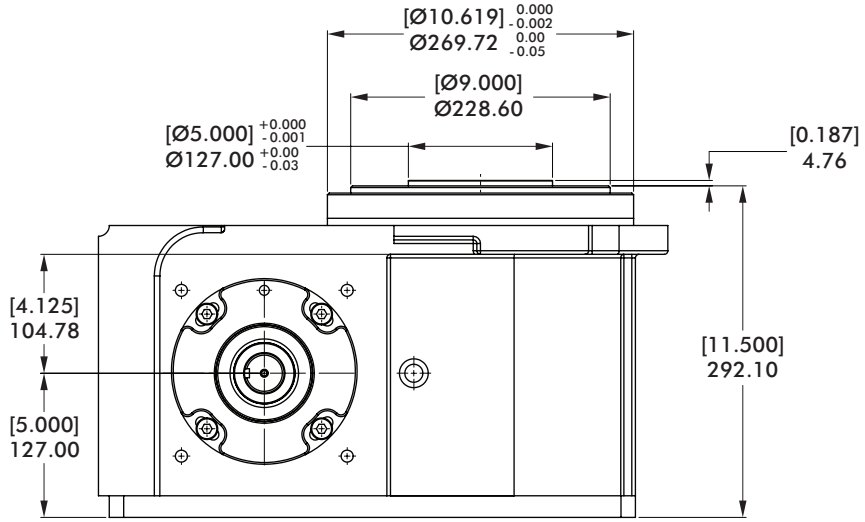

mm [INCH]

THIRD ANGLE PROJECTION

Dimensions and technical information are subject to change without notice

Center Post

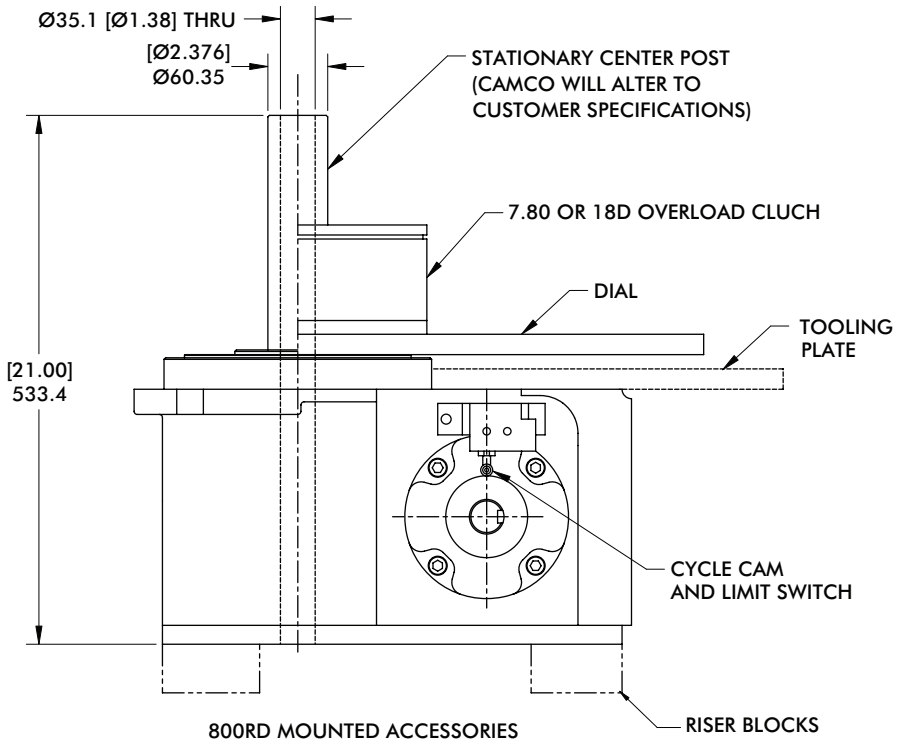

mm [INCH]

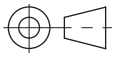

THIRD ANGLE
PROJECTION

Proximity Switch

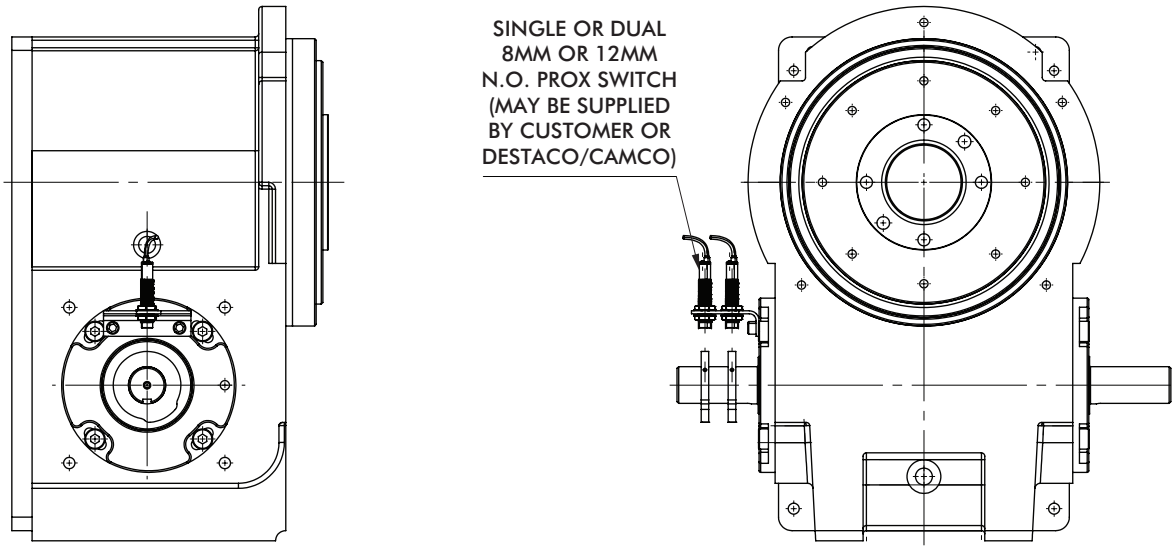

800RD SERIES

Roller Dial Index Drives | Dimensions

18D Overload Clutch

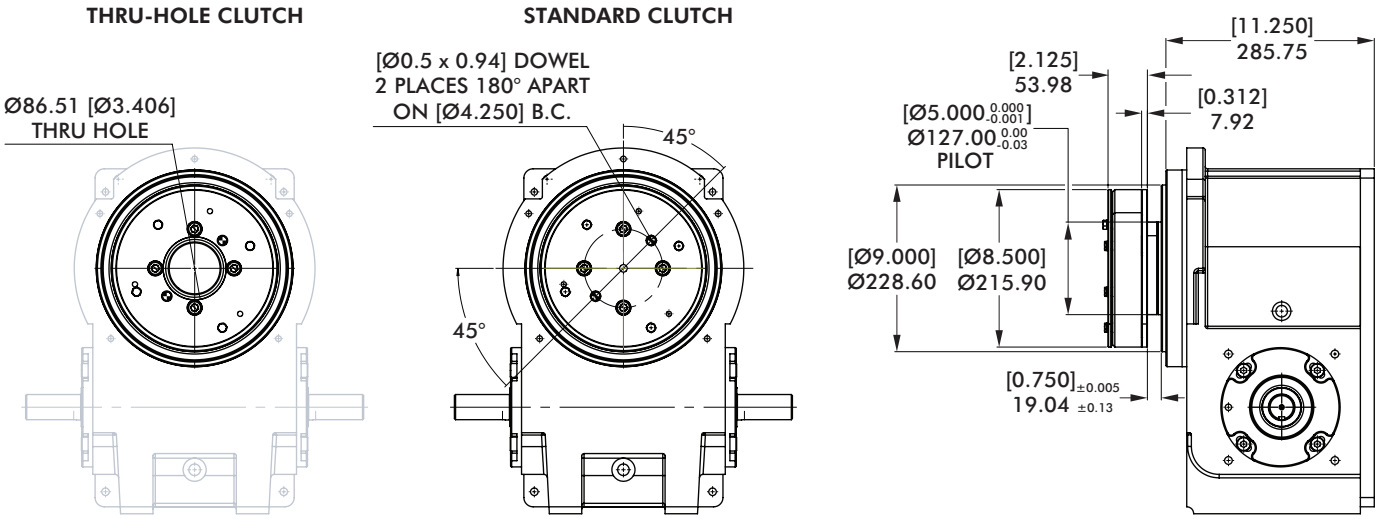

mm [INCH]

THIRD ANGLE PROJECTION

18E Overload Clutch with EZ Dial Mounting Adapter

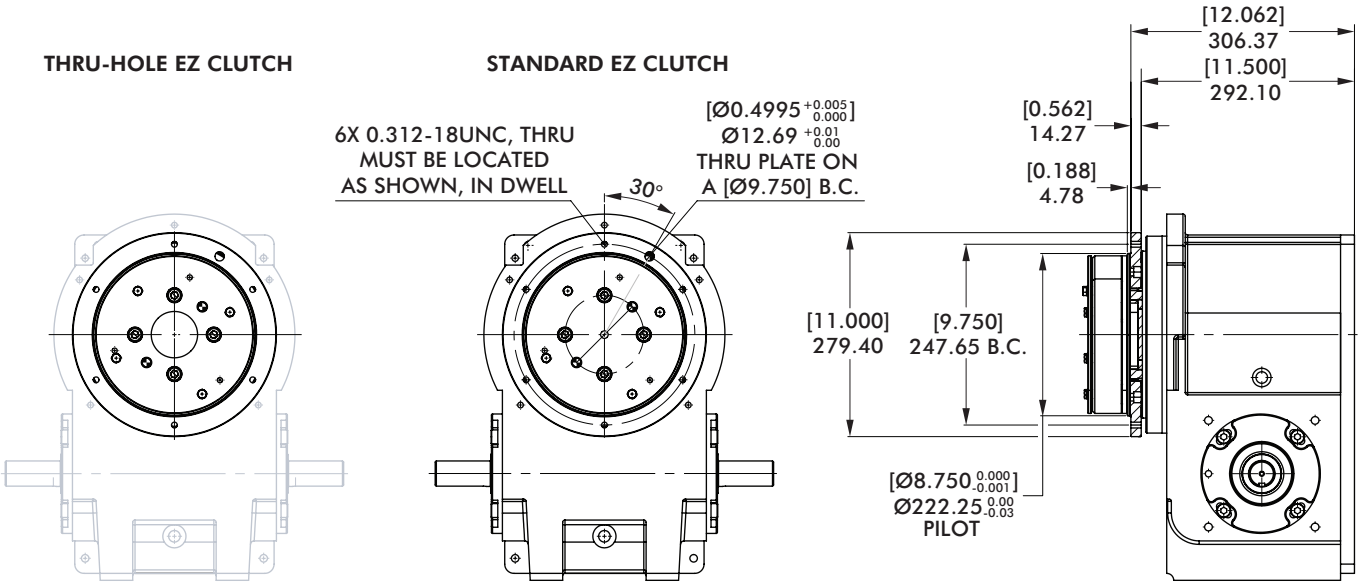

Model	Internal Inertia kg-m² [lb-in²]	Torque Setting N-m [in-lb]
18D/18E	0,852 [2910]	960, 1469, 2260, 3503 [8500, 13000, 20000, 31000]

Dimensions and technical information are subject to change without notice

Notes

1301RD SERIES

Roller Dial Index Drives | Dimensions

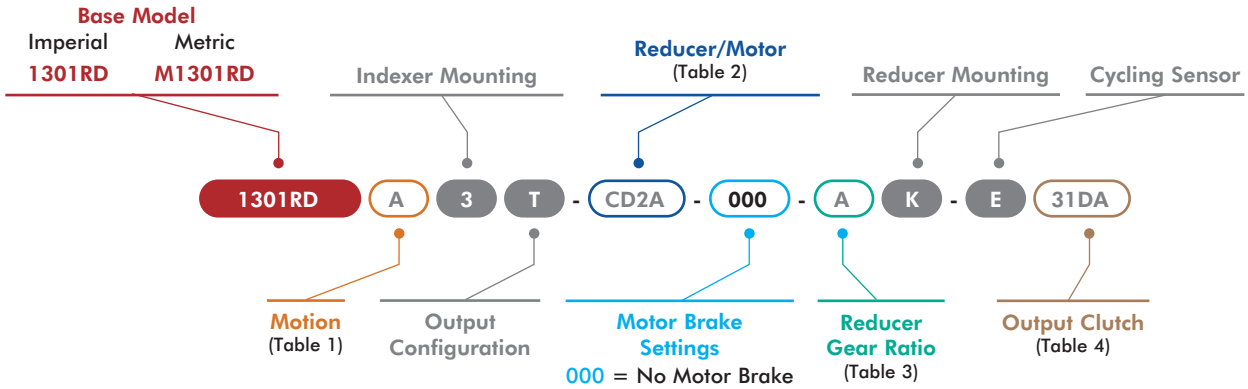

X = See Page 43 for option information.

1 Motion

Code	Description
A	2-STOP-330
B	3-STOP-270
C	3-STOP-330
D	4-STOP-300
E	4-STOP-330
F	6-STOP-270
G	6-STOP-330
H	8-STOP-180
J	8-STOP-270
K	8-STOP-330
L	12-STOP-180
M	12-STOP-270
N	12-STOP-330
P	16-STOP-180
R	16-STOP-270
S	16-STOP-330
T	24-STOP-180
U	24-STOP-270

2 Reducer/Motor Options

Code	Description
0000	No Reducer or Motor*
	Cone Drive 7350C Drive Configurations
CD2A	Indexer w/7350C Adapter
CS2C	Reducer w/145TC Motor Adapter Plate, SE Worm
CS2E	Reducer w/ 2.0HP AC 145TC Motor, SE Worm
CS2H	Reducer w/ 2.0HP 180V DC 143TC Motor, SE Worm
CD2C	Reducer w/145TC Motor Adapter Plate, DE Worm
CD2E	Reducer w/2.0HP AC 145TC Motor, DE Worm
CD2H	Reducer w/2.0HP 180V DC 143TC Motor, DE Worm
	Cone Drive 7400C Drive Configurations
CD3A	Indexer w/7400C Adapter
CS3B	Reducer w/145TC Motor Adapter Plate, SE Worm
CS3D	Reducer w/ 2.0HP AC 145TC Motor, SE Worm
CS2F	Reducer w/2.0HP 180V DC 143TC Motor, SE Worm
CD3B	Reducer w/145TC Motor Adapter Plate, DE Worm
CD3D	Reducer w/ 2.0HP AC 145TC Motor, DE Worm
CD2F	Reducer w/ 2.0HP 180V DC 143TC Motor, DE Worm
	SEW Adapter Plates
SW4A	KH67 Adapter Only
SW5A	KH77 Adapter Only
SW6A	KH87 Adapter Only

*All Reducer/Motor Adapters require Gear Ratio option to be 0.

3 Reducer Gear Ratios*

Code	Description
0	N/A
A	5:1
B	10:1
C	15:1
D	20:1
E	25:1
F	30:1
G	40:1
H	50:1
J	60:1

* Select 0 when Reducer/Motor code is 0000. Must Select a Gear Ratio when a Retducer option is selected in Table 2.

4 Output Clutch & Settings

1301RD Imperial Clutch Models

Code	Description
0000	No Overload Clutch
	31D Clutch
31DA	31D/8500 in-lb, Standard*
31DB	31D/13000 in-lb, Standard*
31DC	31D/20000 in-lb, Standard*
31DD	31D/31000 in-lb, Standard*
31DE	31D/8500 in-lb, Thru-Hole
31DF	31D/13000 in-lb, Thru-Hole
31DG	31D/20000 in-lb, Thru-Hole
31DH	31D/31000 in-lb, Thru-Hole
	31E EZ Clutch
31EA	31D/8500 in-lb, Standard, EZ*
31EB	31D/13000 in-lb, Standard, EZ*
31EC	31D/20000 in-lb, Standard, EZ*
31ED	31D/31000 in-lb, Standard, EZ*
31EE	31D/8500 in-lb, Thru-Hole, EZ
31EF	31D/13000 in-lb, Thru-Hole, EZ
31EG	31D/20000 in-lb, Thru-Hole, EZ
31EH	31D/31000 in-lb, Thru-Hole, EZ

M1301RD Metric Clutch Models

Code	Description
0000	No Overload Clutch
	M31D Clutch
M31DA	M31D/960 Nm, Standard*
M31DB	M31D/1469 Nm, Standard*
M31DC	M31D/2260 Nm, Standard*
M31DD	M31D/3503 Nm, Standard*
M31DE	M31D/960 Nm, Thru-Hole
M31DF	M31D/1469 Nm, Thru-Hole
M31DG	M31D/2260 Nm, Thru-Hole
M31DH	M31D/3503 Nm, Thru-Hole
	M31E EZ Clutch
M31EA	M31D/960 Nm, Standard, EZ*
M31EB	M31D/1469 Nm, Standard, EZ*
M31EC	M31D/2260 Nm, Standard, EZ*
M31ED	M31D/3503 Nm, Standard, EZ*
M31EE	M31D/960 Nm, Thru-Hole, EZ
M31EF	M31D/1469 Nm, Thru-Hole, EZ
M31EG	M31D/2260 Nm, Thru-Hole, EZ
M31EH	M31D/3503 Nm, Thru-Hole, EZ

EZ Clutch allows for direct mounting and removal of application dial plate onto the EZ flange without removing clutch.

*Clutch has a solid plate cover and not compatible with Output Configuration options T and P. See page 43.

Maximum Inertia x 1000 kg-cm² [lb-in²] for standard package							
Stops	Motion Time [seconds]						
	0.458	0.611	0.764	0.917	1.222	1.528	1.833
2	0 [0]	15 [5]	44 [15]	85 [29]	149 [51]	228 [78]	316 [108]
3	12 [4]	47 [16]	108 [37]	199 [68]	348 [119]	524 [179]	720 [246]
4	29 [10]	91 [31]	196 [67]	360 [123]	626 [214]	939 [321]	1288 [440]
6	76 [26]	214 [73]	454 [155]	822 [281]	1419 [485]	2122 [725]	2912 [995]
8	140 [48]	386 [132]	814 [278]	1472 [503]	2531 [865]	3778 [1291]	5183 [1771]
12	325 [111]	881 [301]	1844 [630]	3321 [1135]	5709 [1951]	8513 [2909]	11673 [3989]
16	588 [201]	1574 [538]	3283 [1122]	5911 [2020]	10158 [3471]	15141 [5174]	20757 [7093]
Reducer Ratio							
	15	20	25	30	40	50	60

Features

- 7350C Reducer (Ratios from 15:1 to 60:1)
  - Double Extended Worm Shaft (Input)
  - Motor Adapter and Coupling
- Double Extended Camshaft (Input Shaft)
- 2 HP AC Drive Package with Inverter Duty Motor and Inverter Drive (up to 60 cpm)
- Cycle Cam and Limit Switch Mounted to Camshaft
- Right Hand Cam

Optional Accessories

- 7400C Reducer (Ratios from 5:1 to 60:1) with Motor Adapter and Coupling
- 2 hp DC Motor
- DC Motor Control (up to 30 cpm)
- Output Overload Clutch model 31D
  - Available Settings (in-lbs): 8500, 13,000, 20,000, 31,000
- Center Thru Hole (4.75 in. Diameter)
- Stationary Center Post
- Dual Cam and Limit Switch
- Left Hand Cam
- Relief in Dwell for shot-pin applications
- Universal Mounting Capability
- Custom Dial Plate

Output Load Capacity (loads carried during index):

Radial	70282 N [15800 lbs]
Thrust/Axial	48041N [10800 lbs]
Moment	12315 N-m [109000 in-lbs]

Accuracy ±39 arcsec / ±0,173 mm [±.0068 in] at 914,4 mm [36 in] Radius

Repeatability ±10 arcsec / ±0,043 mm [±.0017 in] at 914,4 mm [36 in] Radius

1301RD SERIES

Roller Dial Index Drives | Dimensions

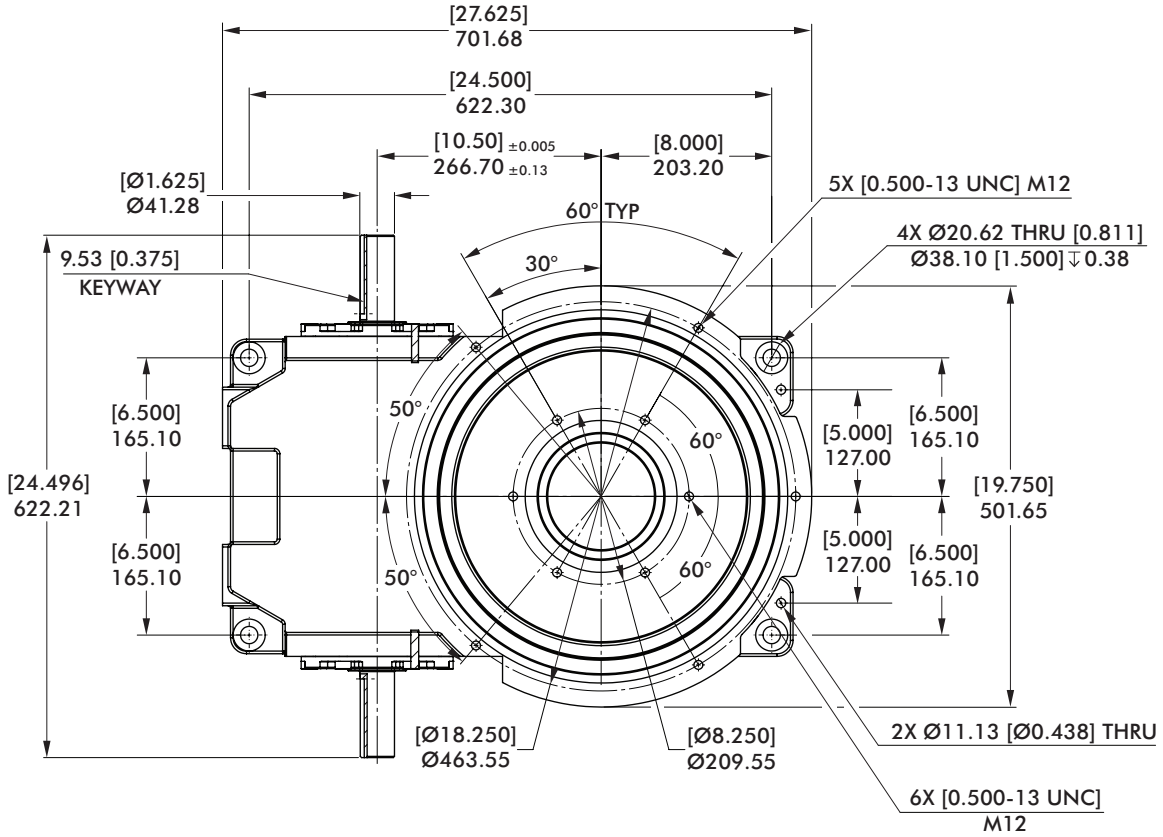

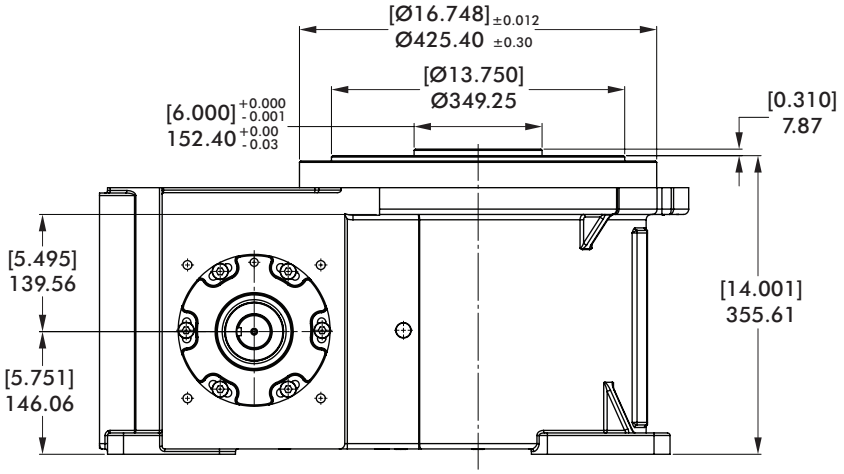

mm [INCH]

THIRD ANGLE PROJECTION

Dimensions and technical information are subject to change without notice

Center Post

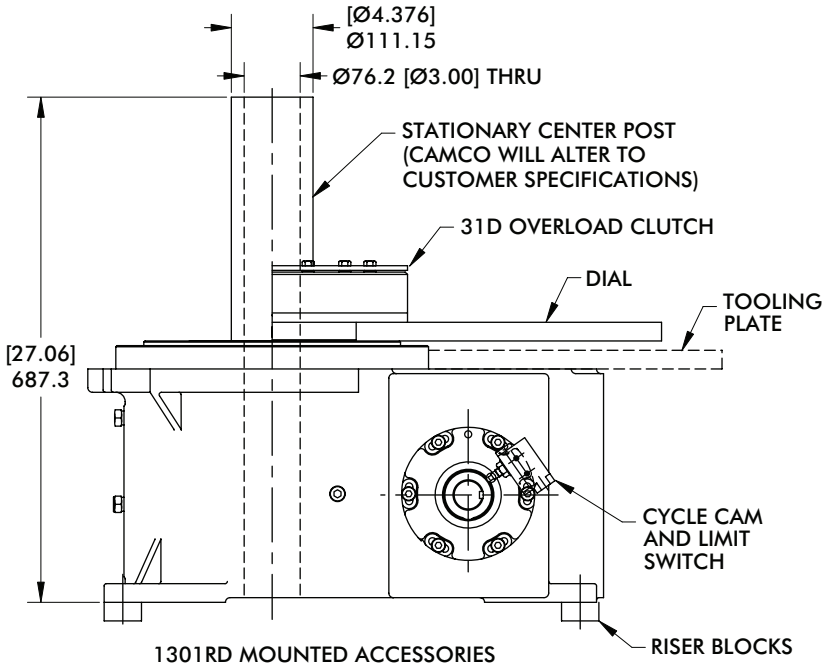

1301RD MOUNTED ACCESSORIES

mm [INCH]

THIRD ANGLE PROJECTION

Proximity Switch

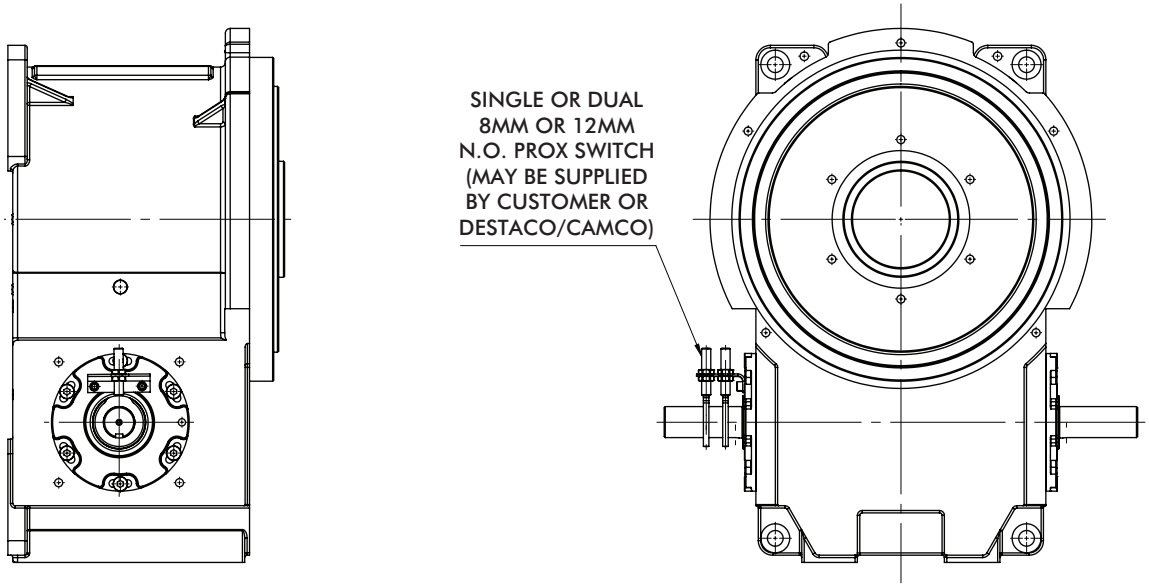

1301RD SERIES

Roller Dial Index Drives | Dimensions

31D Overload Clutch

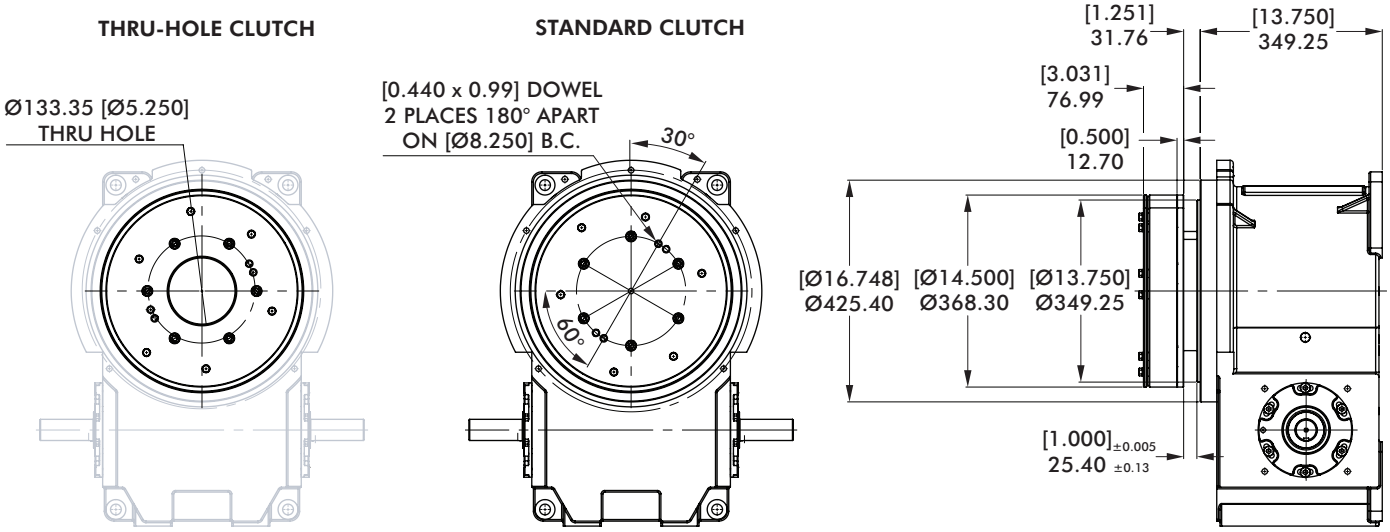

mm [INCH]

THIRD ANGLE PROJECTION

31E Overload Clutch with EZ Dial Mounting Adapter

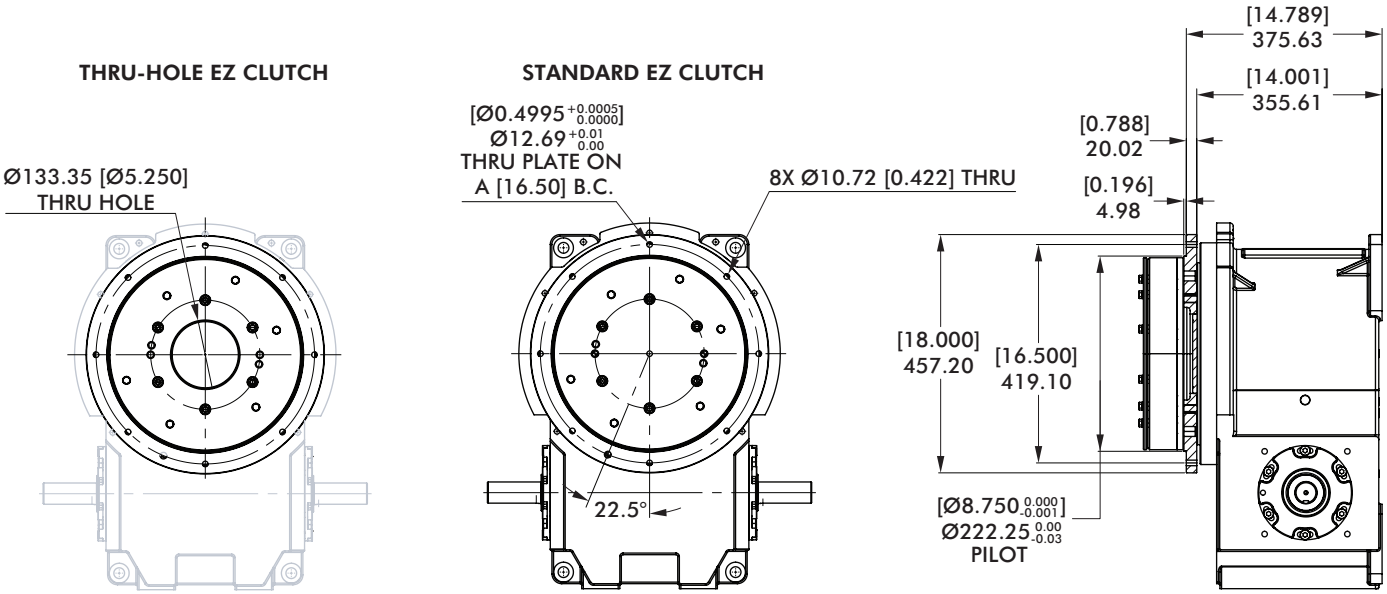

Model	Internal Inertia kg-m² [lb-in²]	Torque Setting N-m [in-lb]
31D/31E	0,852 [2910]	960, 1469, 2260, 3503 [8500, 13000, 20000, 31000]

Dimensions and technical information are subject to change without notice

Notes

1801RD SERIES

Roller Dial Index Drives | Dimensions

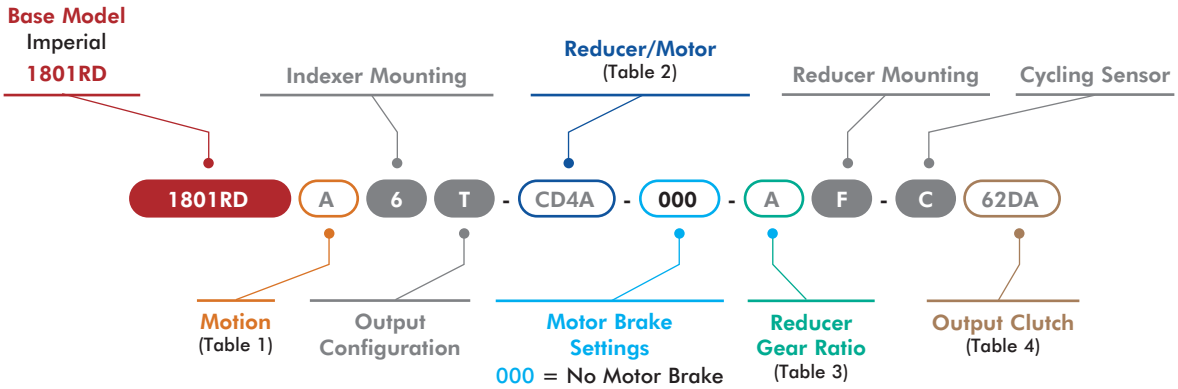

X = See Page 43 for option information.

1 Motion

Code	Description
A	2-STOP-330
B	3-STOP-270
C	3-STOP-330
D	4-STOP-180
E	4-STOP-270
F	4-STOP-330
G	6-STOP-180
H	6-STOP-270
J	6-STOP-330
K	8-STOP-180
L	8-STOP-270
M	8-STOP-330
N	12-STOP-180
P	12-STOP-270
R	12-STOP-330
S	16-STOP-180
T	16-STOP-270
U	16-STOP-330
V	24-STOP-180
W	24-STOP-270

2 Reducer/Motor Options

Code	Description
0000	No Reducer or Motor*
	Cone Drive 7500C Drive Configurations
CD4A	Indexer w/7500C Adapter
CS4C	Reducer w/182TC Motor Adapter Plate, SE Worm
CS4E	Reducer w/ 3.0HP AC 182TC Motor, SE Worm
CS4H	Reducer w/ 3.0HP 180V DC 184TC Motor, SE Worm
CD4C	Reducer w/182TC Motor Adapter Plate, DE Worm
CD4E	Reducer w/3.0HP AC 182TC Motor, DE Worm
CD4H	Reducer w/3.0HP 180V DC 184TC Motor, DE Worm
	Cone Drive 7600C Drive Configurations
CD5A	Indexer w/7600C Adapter
CS5B	Reducer w/182TC Motor Adapter Plate, SE Worm
CS5D	Reducer w/ 3.0HP AC 182TC Motor, SE Worm
CS5F	Reducer w/3.0HP 180V DC 184TC Motor, SE Worm
CD5B	Reducer w/182TC Motor Adapter Plate, DE Worm
CD5D	Reducer w/ 3.0HP AC 182TC Motor, DE Worm
CD5F	Reducer w/ 32.0HP 180V DC 184TC Motor, DE Worm
	SEW Adapter Plates
SW6A	KH87 Adapter Only
SW7A	KH97 Adapter Only

*All Reducer/Motor Adapters require Gear Ratio option to be 0.

3 Reducer Gear Ratios*

Code	Description
0	N/A
A	5:1
B	10:1
C	15:1
D	20:1
E	25:1
F	30:1
G	40:1
H	50:1
J	60:1

* Select 0 when Reducer/Motor code is 0000. Must Select a Gear Ratio when a Retducer option is selected in Table 2.

4 Output Clutch & Settings

1801RD Imperial Clutch Models

Code	Description
0000	No Overload Clutch
	62D Clutch
62DA	62D/23000 in-lb, Standard*
62DB	62D/36000 in-lb, Standard*
62DC	62D/44000 in-lb, Standard*
62DD	62D/50000 in-lb, Standard*
62DE	62D/60000 in-lb, Standard*
62DF	62D/23000 in-lb, Thru-Hole
62DG	62D/36000 in-lb, Thru-Hole
62DH	62D/44000 in-lb, Thru-Hole
62DJ	62D/50000 in-lb, Thru-Hole
62DK	62D/60000 in-lb, Thru-Hole
	62E EZ Clutch
62EA	62D/23000 in-lb, Standard, EZ*
62EB	62D/36000 in-lb, Standard, EZ*
62EC	62D/44000 in-lb, Standard, EZ*
62ED	62D/50000 in-lb, Standard, EZ*
62EE	62D/60000 in-lb, Standard, EZ*
62EF	62D/23000 in-lb, Thru-Hole, EZ
62EG	62D/36000 in-lb, Thru-Hole, EZ
62EH	62D/44000 in-lb, Thru-Hole, EZ
62EJ	62D/50000 in-lb, Thru-Hole, EZ
62EK	62D/60000 in-lb, Thru-Hole, EZ

EZ Clutch allows for direct mounting and removal of application dial plate onto the EZ flange without removing clutch.

*Clutch has a solid plate cover and not compatible with Output Configuration options T and P. See page 43.

Maximum Inertia x 1000 kg-cm² [lb-in²] for standard package							
Stops	Motion Time [seconds]						
	0.458	0.611	0.764	0.917	1.222	1.528	1.833
2	0 [0]	15 [5]	53 [18]	114 [39]	319 [109]	670 [229]	1,206 [412]
3	6 [2]	50 [17]	129 [44]	252 [86]	673 [230]	1,393 [476]	2,487 [850]
4	26 [9]	114 [39]	269 [92]	512 [175]	1,340 [458]	2,748 [939]	4,893 [1,672]
6	79 [27]	266 [91]	600 [205]	1,121 [383]	2,894 [989]	5,914 [2,021]	10,515 [3,593]
8	158 [54]	492 [168]	1,083 [370]	2,010 [687]	5,159 [1,763]	10,529 [3,598]	18,708 [6,393]
12	372 [127]	1,121 [383]	2,455 [839]	4,542 [1,552]	11,627 [3,973]	23,710 [8,102]	42,114 [14,391]
16	679 [232]	2,010 [687]	4,384 [1,498]	8,091 [2,765]	20,690 [7,070]	42,17 [1,441]	56,933 [19,455]
Reducer Ratio							
	15	20	25	30	40	50	60

Features

- 7500C Reducer (Ratios from 15:1 to 60:1)
  - Double Extended Worm Shaft (Input)
  - Motor Adapter and Coupling
- Double Extended Camshaft (Input Shaft)
- 3 HP AC Drive Package with Inverter Duty Motor and Inverter Drive (up to 60 cpm)
- Cycle Cam and Limit Switch Mounted to Camshaft
- Right Hand Cam

Optional Accessories

- 7600C or 7700C Reducer (Ratios from 5:1 to 60:1) with Motor Adapter and Coupling
- 3 hp DC Motor
- Output Overload Clutch model 62D
  - Available Settings (in-lbs): 23,000, 36,000, 44,000, 50,000, 60,000
- Center Thru Hole (7.00 in. Diameter)
- Stationary Center Post
- Dual Cam and Limit Switch
- Left Hand Cam
- Relief in Dwell for shot-pin applications
- Custom Dial Plate

Output Load Capacity (loads carried during index):

Radial	65, 834 N [14,800 lbs]
Thrust/Axial	56,048 N [12,600 lbs]
Moment	12,089 N-m [107,000 in-lbs]

Accuracy ±27 arcsec / ±.160 mm [±.0063 in] at 1,219.2 mm [48 in] Radius

Repeatability ±7 arcsec / ±.041 mm [±.0016 in] at 1,219.2 mm [48 in] Radius

1801RD SERIES

Roller Dial Index Drives | Dimensions

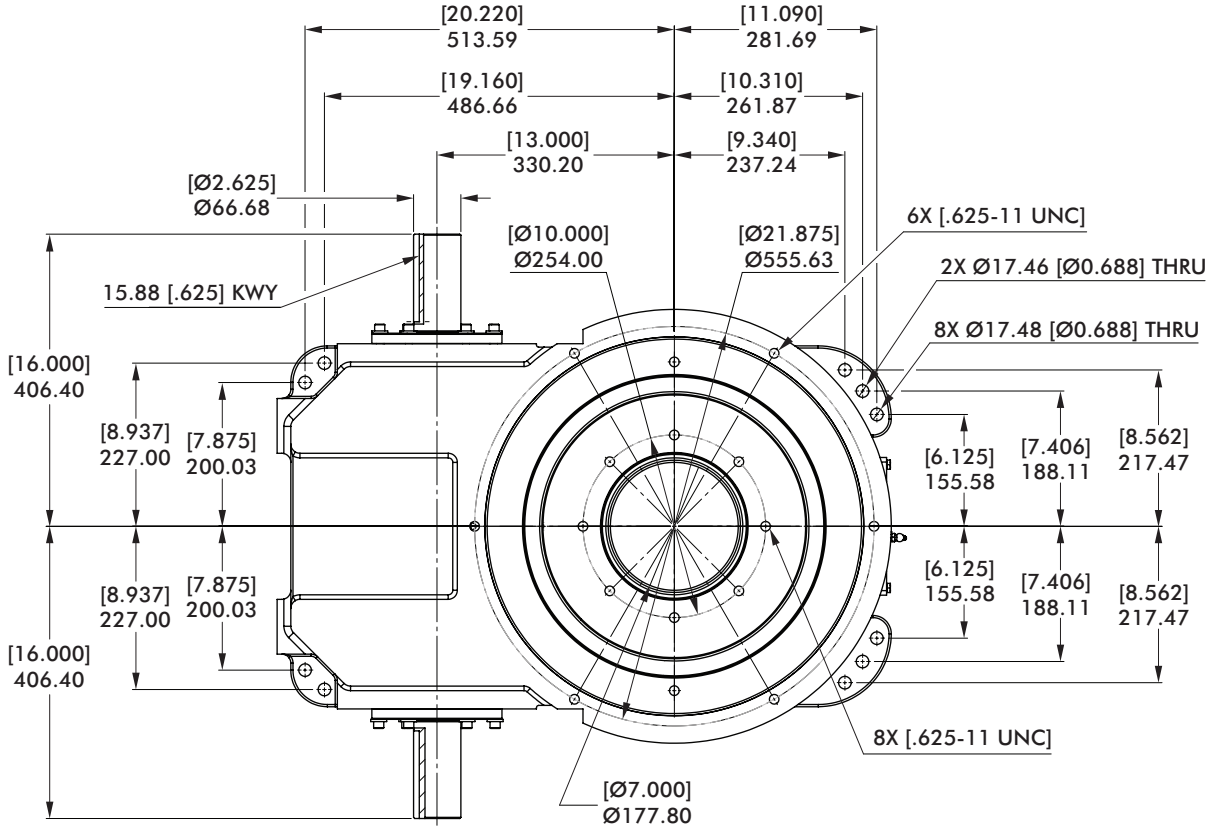

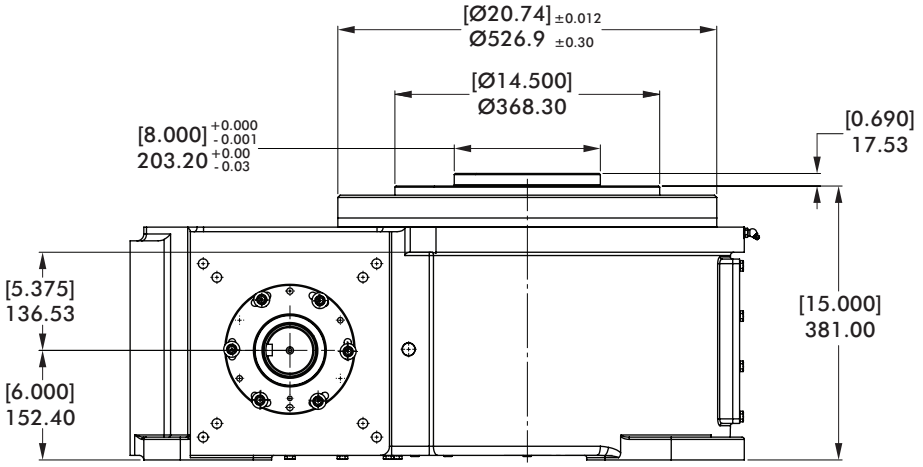

mm [INCH]

THIRD ANGLE PROJECTION

Dimensions and technical information are subject to change without notice

Center Post

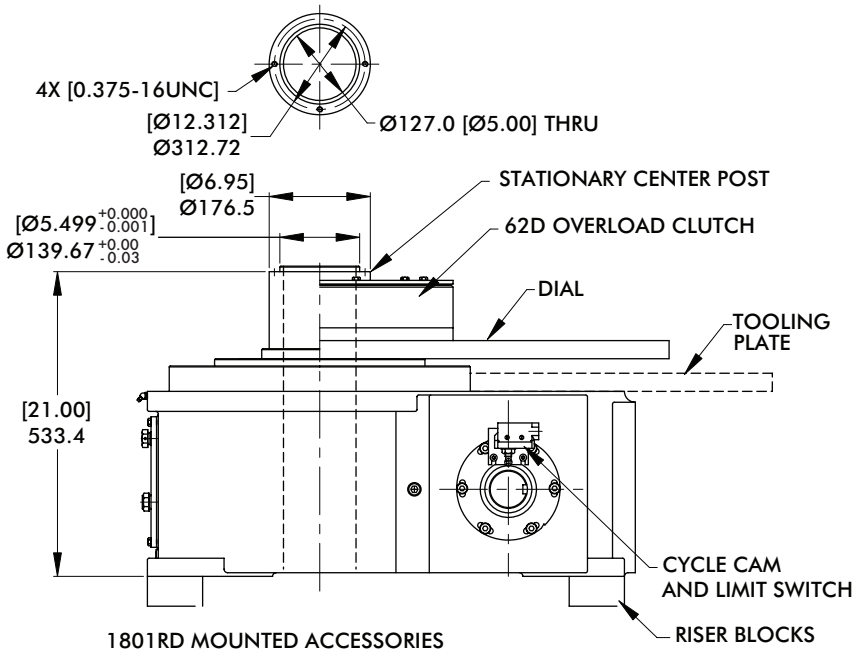

mm [INCH]

THIRD ANGLE PROJECTION

Proximity Switch

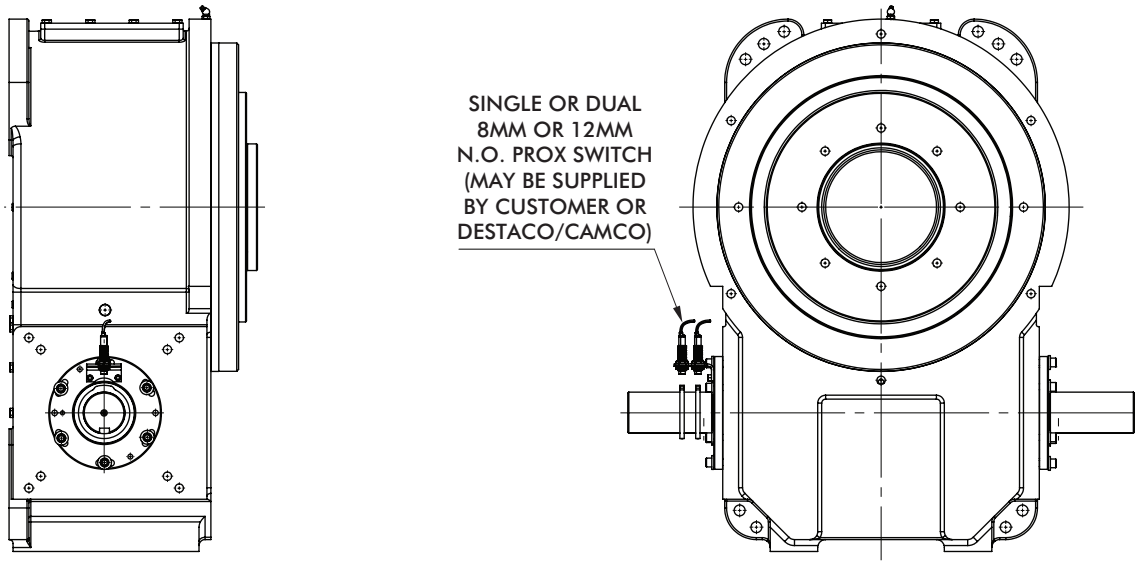

1801RD SERIES

Roller Dial Index Drives | Dimensions

62D Overload Clutch

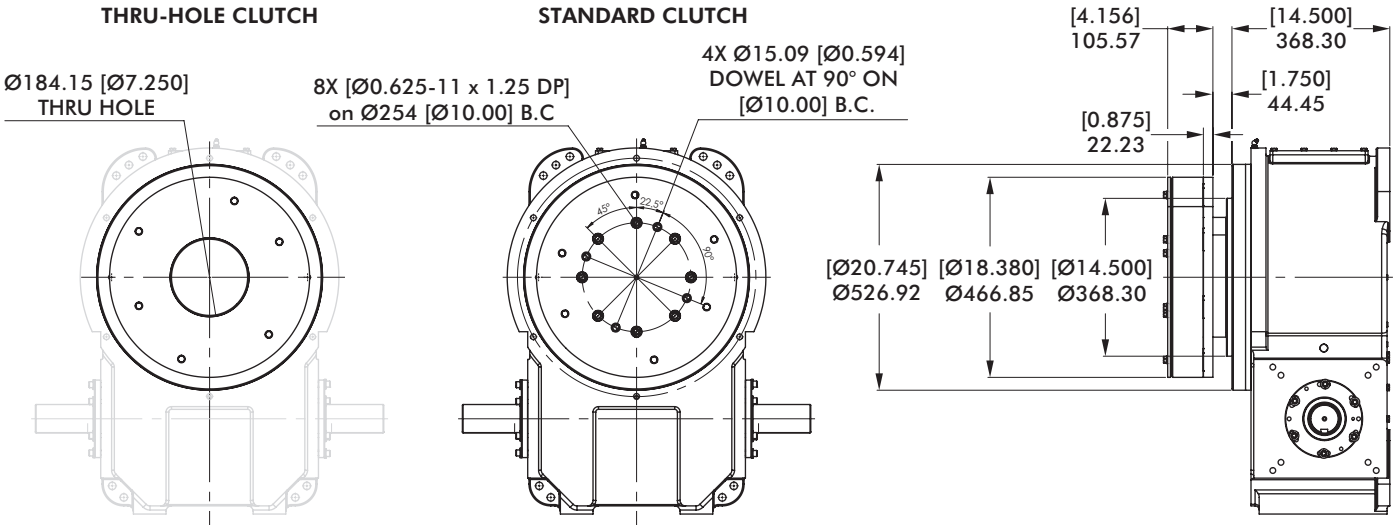

mm [INCH]

THIRD ANGLE PROJECTION

62E Overload Clutch with EZ Dial Mounting Adapter

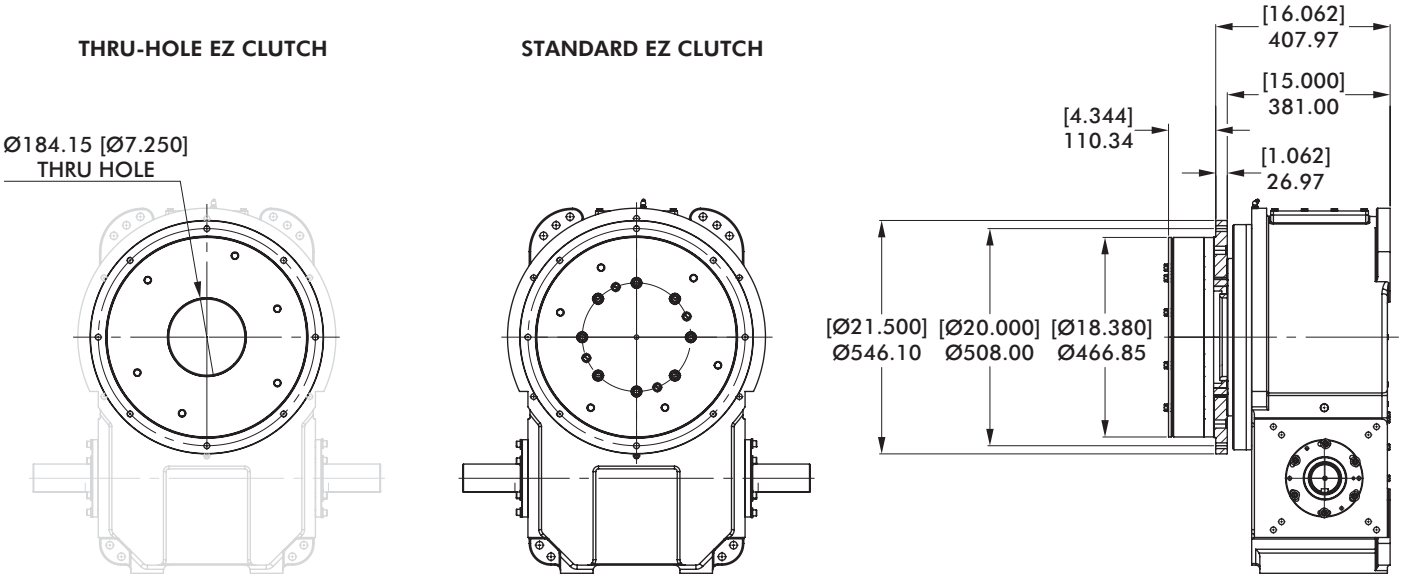

Model	Internal Inertia kg-m² [lb-in²]	Torque Setting N-m [in-lb]
62D/62E	345 [4900]	2599, 4067, 4971, 5649, 6779 [23000, 36000, 44000, 50000, 60000]

Dimensions and technical information are subject to change without notice

Notes

PRECISION INDEXING SOLUTIONS

Table of Contents

INDEXERS

Servo Positioners

GTB Series
Globoidal (Roller Gear)
Servo Positioner.....IN-SRV-1

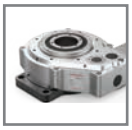

PGM Series
Parallel Gear Servo Positioner...IN-SRV-19

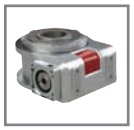

RSD Series
Rotary Servo Drives.....IN-SRV-25

Mechanical Indexers

RDM Series
Rotary Index Drive IN-MCH-1

RD Series
Roller Dial Index Drive..... IN-MCH-42

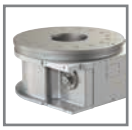

E Series
Heavy-Duty Index Drive IN-MCH-54

RA Series
Right Angle Index Drive IN-MCH-66

RGD/RGS Series
Roller Gear Index Drive IN-MCH-76

P Series
Parallel Shaft/Flange Drive.... IN-MCH-96

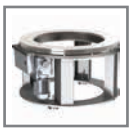

RNG Series
Ring Drive Dial Indexer.. IN-MCH-108

OVERLOAD CLUTCHES

Overload Clutches
Output Overload..... IN-CLU-1

CUSTOM CAMS

Custom Cams
Cam Design Solutions IN-CAM-1

CONVEYORS

Rite-Link Series
Thin-Profile..... IN-CNV-1

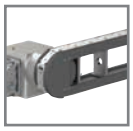

Precision Link Series
Table-Top IN-CNV-4

Precision Link Series
Heavy-Duty IN-CNV-16

PARTS HANDLERS

LPP Series
Linear Part Handlers IN-PRT-2

RPP Series
Rotary Part Handlers IN-PRT-8

Dimensions and technical information are subject to change without notice

HEAVY DUTY INDEX DRIVE

Table of Contents

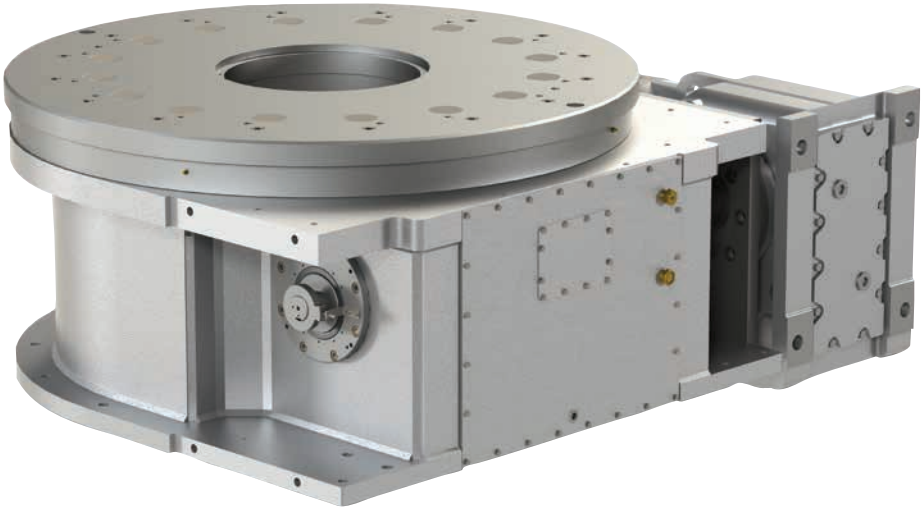

Features:

The **CAMCO E-Series Heavy Duty Index Drive** is ideal for heavy-duty rotary dial applications with features including:

Large output mounting surface supported by a 4-point contact bearing providing superior thrust and moment capacity

Large center thru-hole to acco mmodate stationary center post, electrical wiring and air or hydraulic lines

Complete motorized drive package with reducer and AC inverter drive to suit most applications

Precision cam with preloaded cam followers for maximum accuracy

Durable welded steel housing

Preloaded "center rib" design for smooth acceleration and deceleration with precision positioning

Table of Contents

How to Order 55

750E..... 57

950E..... 59

1150E..... 61

1550E..... 63

E-SERIES

Heavy Duty Index Drive | How To Order

Base Model	Description
750E	w/ KH87 reducer &12.5 HP AC motor (220/440V)
950E	w/ KH87 reducer & 15 HP AC motor (220/440V)
1150E	w/ KH107 reducer & 25 HP AC motor (220/440V)
1550E	w/ KH127 reducer & 30 HP AC motor (220/440V)

Control (only available with these models)

1 15 HP 240V 750E & 950E only
2 15 HP 440V 750E & 950E only
3 25 HP 240V 1150E only
4 25 HP 440V 1150E only
5 30 HP 240V 1550E only
6 30 HP 440V 1550E only

Motion	Stops	Index Period
A	2	330
B	3	330
C	4	330
D	6	330
E	8	330
F	12	330
G	16	330

Index Mounting (See Figure 1)

1
2
3
4
5
6

Reducer Ratio

	750E 950E	1150E	1550E
A	14.50	29.00	40.19
B	19.95	42.33	54.07
C	24.92	49.90	70.95
D	31.39	52.17	81.98
E	44.02	66.52	89.89
F	49.16	73.30	110.18
G	63.00	82.61	122.98

Reducer Mounting (See Figure 3)

A

Signal Switch

M Mechanical
P Proximity

Example: MS or PS

Note about signal switch options:
a) Mechanical is a single switch with cam.
b) Proximity option is a mounting bracket for 8 or 12 mm proximity switch. A proximity switch will not be supplied. Cam supplied as target.

Signal Switch Side (See Figure 2)

S Shaft

Other Motions (stops and index periods) available. Contact your DESTACO sales representative for more information.

Input Shaft Configuration/Rotations (Figure 1)

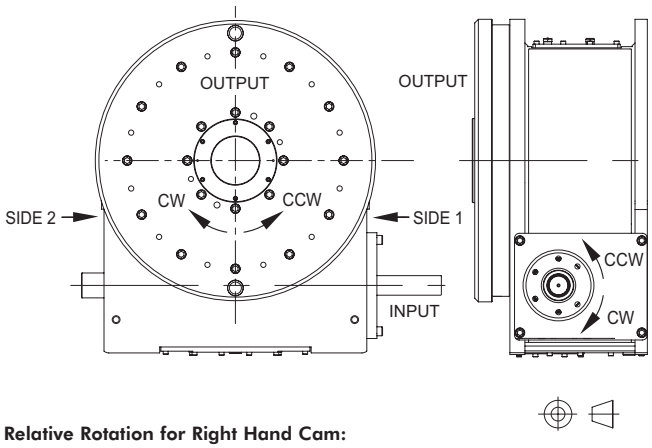

Relative Rotation for Right Hand Cam:

CW Input Side 1 CCW Output
CCW Input Side 2 CWW Output

NOTE: Input can be driven in either direction

Signal Switch Mounting Position (Figure 2)

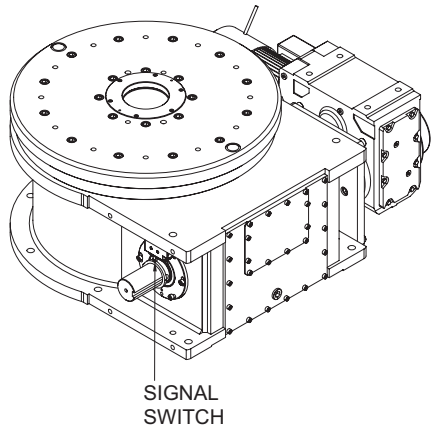

Gear Reducer Mounting Position (Figure 3)

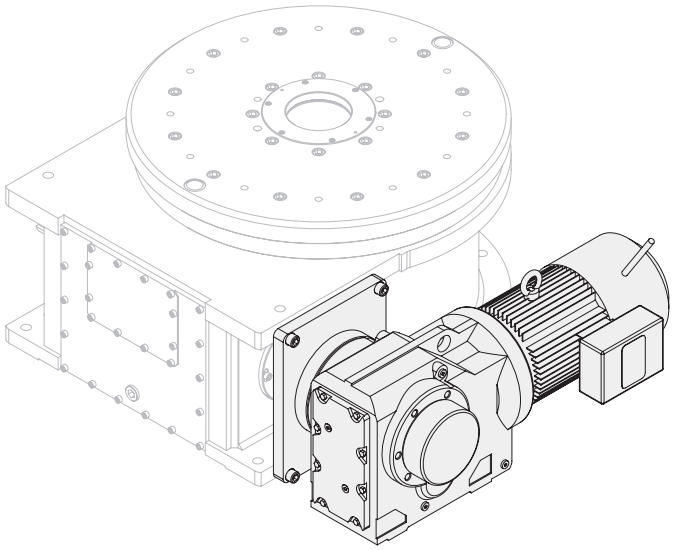

750E SERIES

Heavy Duty Index Drive | Dimensions

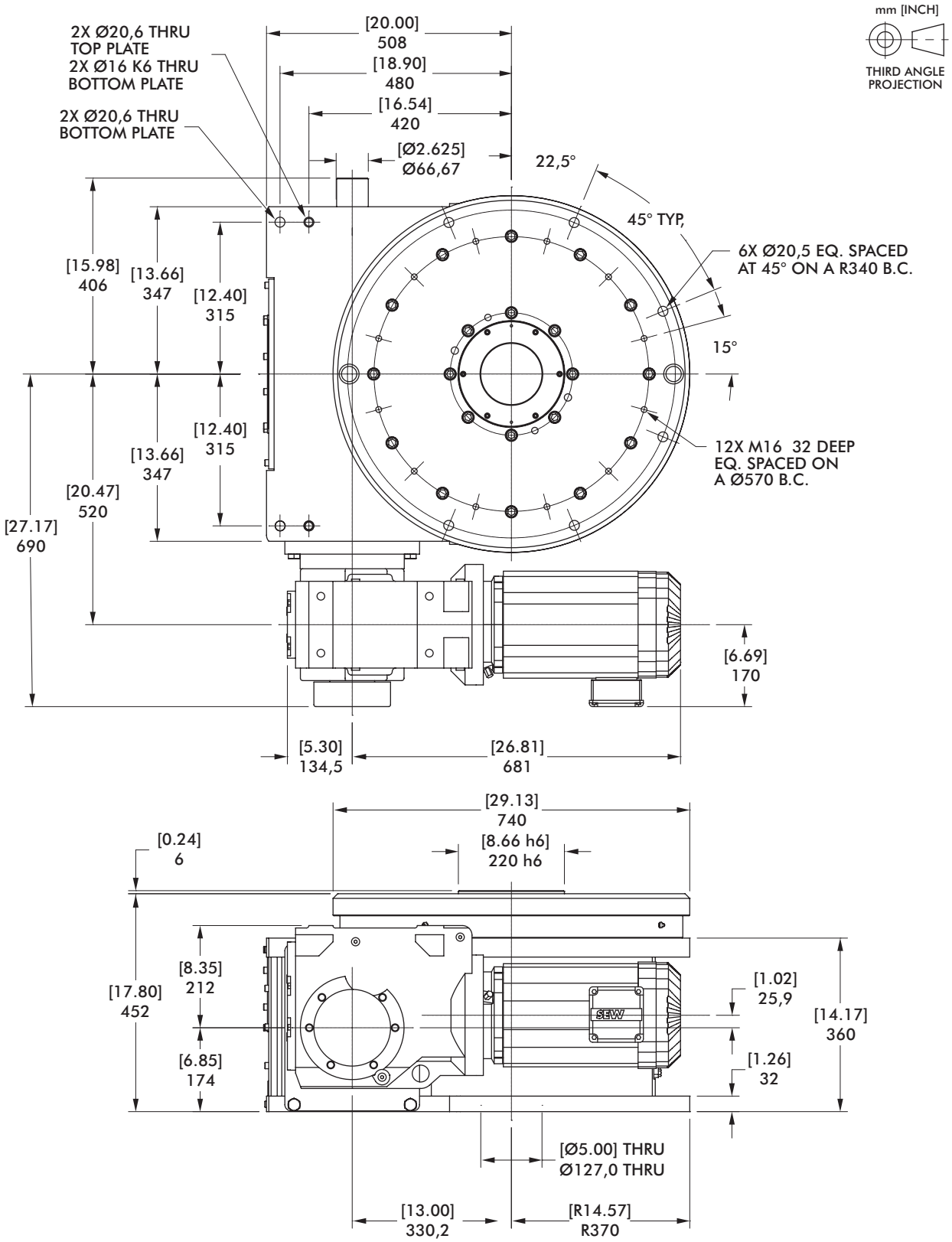

Dimensions and technical information are subject to change without notice

Maximum Inertia x 1000 [lb-in²] kg-cm² for standard package							
Stops	Motion Time [seconds]						
	0.44	0.59	0.76	0.96	1.35	1.50	1.93
2	[0] 0	[27] 79	[105] 307	[254] 743	[751] 2198	[987] 2888	[1647] 4820
3	[14] 41	[98] 287	[257] 752	[562] 1645	[1577] 4615	[2058] 6023	[3407] 9970
4	[67] 196	[231] 676	[542] 1586	[1140] 3336	[3128] 9154	[4072] 11916	[6714] 19648
6	[191] 559	[542] 1586	[1209] 3538	[2491] 7290	[6756] 19771	[8781] 25697	[14447] 42278
8	[372] 1089	[931] 2724	[1677] 4908	[2841] 8314	[5587] 16350	[6968] 20391	[11444] 33490
12	[886] 2593	[2291] 6704	[4840] 14164	[8195] 23982	[16116] 47162	[20100] 58821	[33010] 96600
16	[1351] 3954	[2717] 7951	[4837] 14155	[8254] 24154	[16263] 47592	[20283] 59356	[33311] 97481
Reducer Ratio							
	14.45	19.45	24.92	31.39	44.02	49.16	63.00

Features

- KH87 Gear Reducer with Brake-motor
- Double Extended Camshaft (Input shaft)
- Center Thru Hole (Ø127 mm [Ø5 in])
- Cycle Cam and Limit Switch
- Right Hand Cam

Optional Accessories

- Left Hand Cam
- Relief in Dwell for Shot-Pin applications
- Dual Cam & limit Switch
- KH97 Gear Reducer with Brake-motor
- Stationary Center Post
- Visual Disk Dwell Indicator

Output Load Capacity (loads carried during index):

Radial	129888 N [29200 lbs]
Thrust/Axial	186825 N [42000 lbs]
Moment	46830 N-m [414500 in-lbs]

Typical Application Dial Diameter:	1397 mm to 2794 mm [55 in to 110 in]
Accuracy	±27 arcsec / ±.0,05 mm [±.002 in] at 381 mm [15in] Radius
Repeatability	±7 arcsec / ±.0,013 mm [±.0005 in] at 381 mm [15in] Radius

950E SERIES

Heavy Duty Index Drive | Dimensions

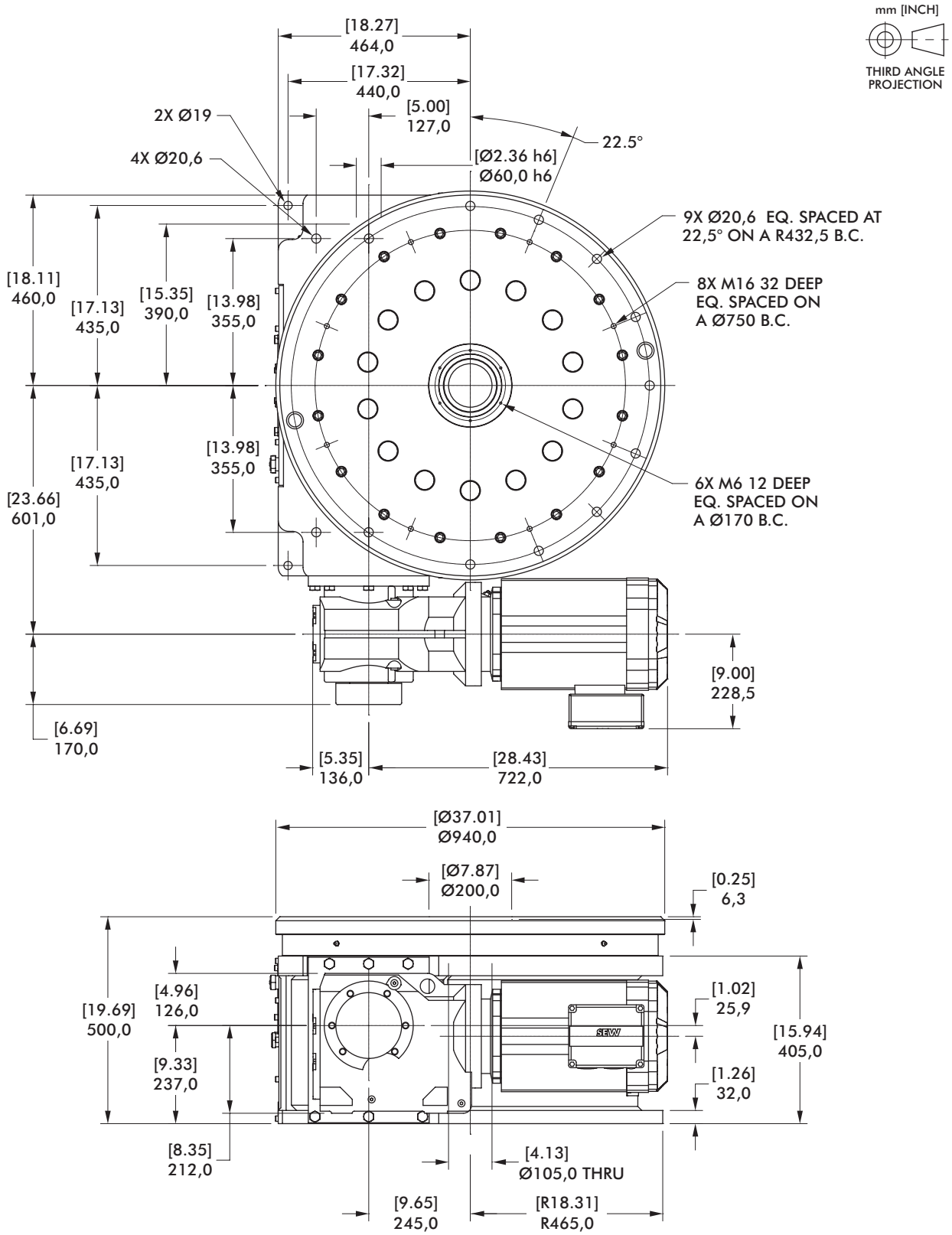

Dimensions and technical information are subject to change without notice

Maximum Inertia x 1000 [lb-in²] kg-cm² for standard package							
Stops	Motion Time [seconds]						
	0.44	0.59	0.76	0.96	1.35	1.50	1.93
2	[0] 0	[0] 0	[61] 179	[224] 656	[619] 1811	[833] 2438	[1433] 4194
3	[0] 0	[59] 173	[250] 732	[619] 1811	[1507] 4410	[1989] 5821	[3337] 9765
4	[16] 47	[205] 600	[564] 1650	[1252] 3664	[2911] 8519	[3810] 11150	[6329] 18521
6	[187] 547	[634] 1855	[1479] 4328	[3102] 9078	[7013] 20523	[9135] 26733	[15073] 44110
8	[412] 1206	[1169] 3421	[2603] 7617	[5287] 15472	[11478] 33589	[14315] 41891	[23511] 68803
12	[1025] 3000	[2729] 7986	[5956] 17430	[10793] 31585	[23621] 69124	[30484] 89208	[53172] 155602
16	[1290] 3775	[2647] 7746	[4753] 13909	[8147] 23841	[17305] 50641	[21582] 63157	[35445] 103726
Reducer Ratio							
	14.45	19.45	24.92	31.39	44.02	49.16	63.00

Features

- KH87 Gear Reducer with Brake-motor
- Double Extended Camshaft (Input shaft)
- Center Thru Hole (Ø105 mm [Ø4.13 in])
- Cycle Cam and Limit Switch
- Right Hand Cam

Optional Accessories

- Left Hand Cam
- Relief in Dwell for Shot-Pin applications
- Dual Cam & limit Switch
- KH97 Gear Reducer with Brake-motor
- Stationary Center Post
- Visual Disk Dwell Indicator

Output Load Capacity (loads carried during index):

Radial	233976 N [52600 lbs]
Thrust/Axial	337397 N [75850 lbs]
Moment	110438 N-m [977500 in-lbs]

Typical Application Dial Diameter:	1778 mm to 3556 mm [70 in to 140 in]
Accuracy	±29 arcsec / ±0,058 mm [±.0023 in] at 762 mm [30in] Radius
Repeatability	±6 arcsec / ±.0,015 mm [±.0006 in] at 762 mm [30in] Radius

1150E SERIES

Heavy Duty Index Drive | Dimensions

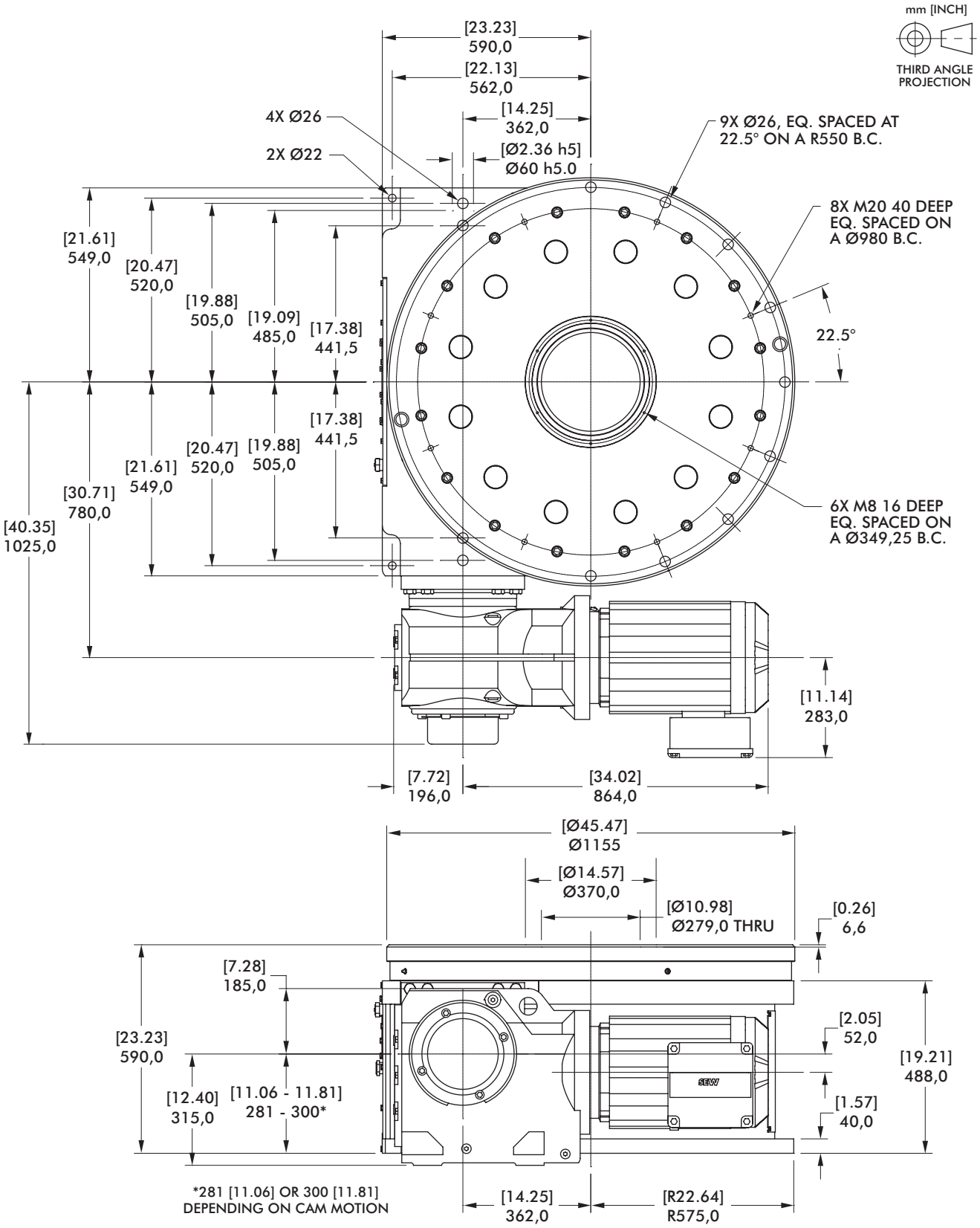

Dimensions and technical information are subject to change without notice

Maximum Inertia x 1000 kg-cm² [lb-in²] for standard package							
Stops	Motion Time [seconds]						
	0.89	1.29	1.52	1.75	2.03	2.24	2.52
2	[134] 392	[1141] 3339	[2093] 6125	[3329] 9742	[4746] 13889	[5835] 17076	[7501] 21951
3	[698] 2043	[2965] 8677	[5108] 14948	[7887] 23080	[11077] 32416	[13526] 39582	[17275] 50554
4	[1445] 4229	[5474] 16019	[9284] 27169	[14225] 41628	[19896] 58224	[24249] 70962	[30915] 90470
6	[3780] 11062	[12845] 37590	[21419] 62680	[32537] 95216	[45296] 132554	[55090] 161215	[70088] 205105
8	[6581] 19259	[21959] 64261	[36502] 106819	[54381] 159140	[73624] 215453	[89397] 261611	[113548] 332286
12	[15621] 45713	[50221] 146967	[82944] 242727	[123772] 362206	[167569] 490373	[203468] 595428	[258436] 756286
16	[27975] 81866	[61083] 178753	[84884] 248404	[111420] 326059	[150846] 441435	[183162] 536005	[232645] 680812
Reducer Ratio							
	29.00	42.33	49.90	57.17	66.52	73.30	82.61

Features

- KH107 Gear Reducer with Brake-motor
- Double Extended Camshaft (Input shaft)
- Center Thru Hole (Ø278 mm [Ø10.94 in])
- Cycle Cam & limit Switch
- Right Hand Cam

Optional Accessories

- Left Hand Cam
- Relief in Dwell for Shot-Pin applications
- Dual Cam & limit Switch
- KH127 Gear Reducer with Brake-motor
- Stationary Center Post
- Visual Disk Dwell Indicator

Output Load Capacity (loads carried during index):

Radial	262556 N [59025 lbs]
Thrust/Axial	380189 N [85470 lbs]
Moment	165968 N-m [1469000 in-lbs]

Typical Application Dial Diameter: 2286 mm to 4572 mm [90 in to 180 in]

Accuracy ±16 arcsec / ±0,05 mm [±.002 in] at 635 mm [25in] Radius

Repeatability ±4 arcsec / ±0,013 mm [±.0005 in] at 635 mm [25in] Radius

1550E SERIES

Heavy Duty Index Drive | Dimensions

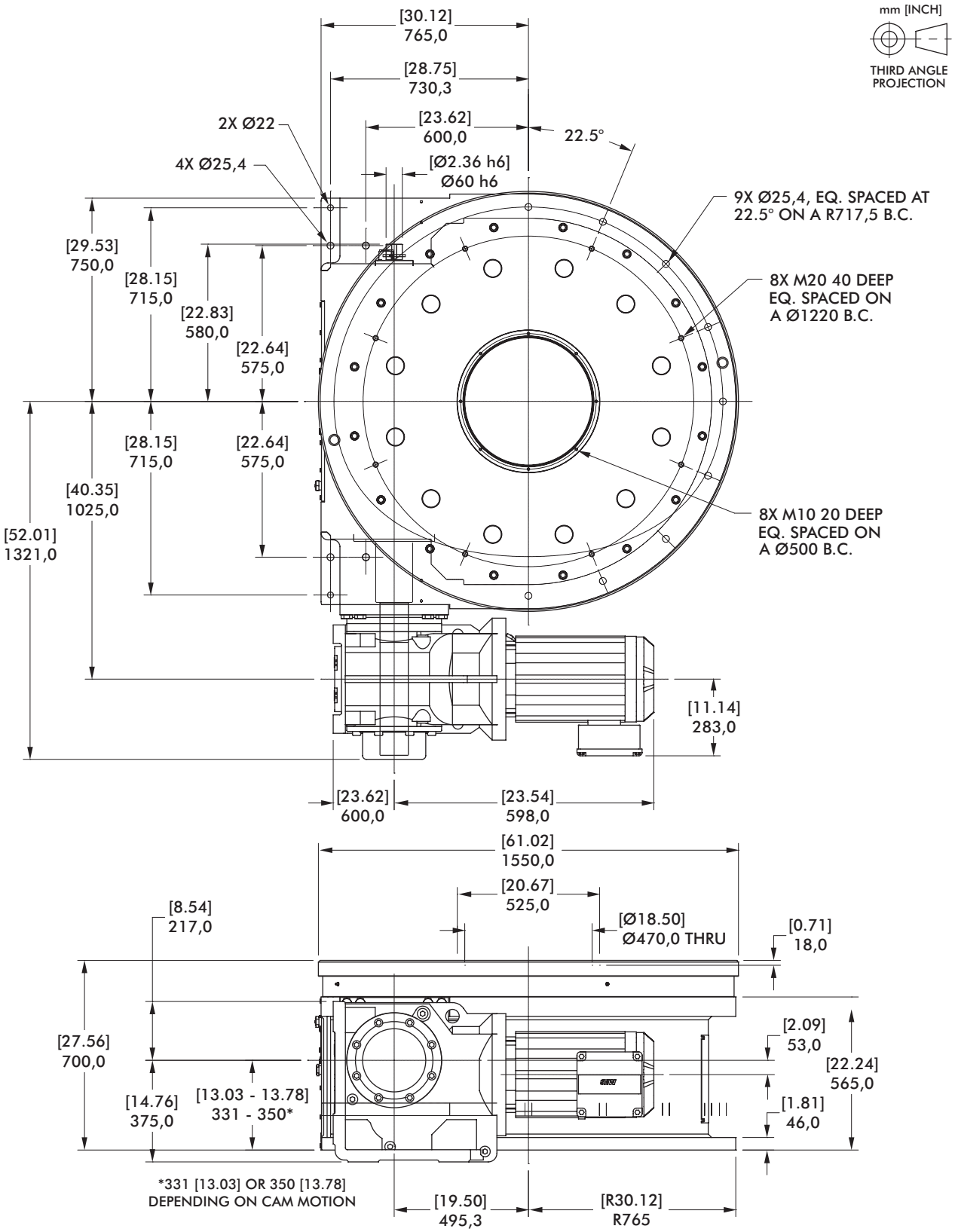

Dimensions and technical information are subject to change without notice

Maximum Inertia x 1000 kg-cm² [lb-in²] for standard package							
Stops	Motion Time [seconds]						
	1.23	1.65	2.17	2.50	2.75	3.37	3.74
2	[0] 0	[1926] 5636	[6208] 18167	[10388] 30399	[13740] 40209	[21944] 64217	[26735] 78237
3	[1811] 5300	[6814] 19940	[17561] 51390	[28054] 82097	[36466] 106714	[57057] 166971	[69084] 202167
4	[4396] 12864	[13172] 38546	[32028] 93727	[50439] 147605	[65198] 190795	[101324] 296514	[122426] 358267
6	[11290] 33039	[30132] 88178	[70615] 206647	[110143] 322322	[141829] 415048	[219391] 642025	[264696] 774605
8	[22185] 64922	[57289] 167650	[132712] 388368	[195668] 572602	[235249] 688432	1034294 [353436]	[436753] 1278112
12	146334 [50005]	366888 [125372]	[287302] 840760	1303461 [445415]	1674364 [572159]	2582270 [882406]	3038949 [1038461]
16	263112 [89910]	603493 [206224]	1039120 [355085]	1387320 [474071]	1667952 [569968]	2505914 [856314]	3038949 [1038461]
Reducer Ratio							
	40.19	54.07	70.95	81.98	89.89	110.18	122.48

Features

- KH127 Gear Reducer with Brake-motor
- Double Extended Camshaft (Input shaft)
- Center Thru Hole (Ø470 mm [Ø18.50 in])
- Cycle Cam and Limit Switch
- Right Hand Cam

Optional Accessories

- Left Hand Cam
- Relief in Dwell for Shot-Pin applications
- Dual Cam & limit Switch
- KH157 Gear Reducer with Brake-motor
- Stationary Center Post
- Visual Disk Dwell Indicator

Output Load Capacity (loads carried during index):

Radial	367423 N [82600 lbs]
Thrust/Axial	533786 N [120000 lbs]
Moment	328094 N-m [2904000 in-lbs]

Typical Application Dial Diameter:	2997 mm to 5994 mm [118 in to 236 in]
Accuracy	±12 arcsec / ±0,043 mm [±.0017 in] at 762 mm [30in] Radius
Repeatability	±3 arcsec / ±0,010 mm [±.0004 in] at 762 mm [30in] Radius

PRECISION INDEXING SOLUTIONS

Table of Contents

INDEXERS

Servo Positioners

GTB Series
Globoidal (Roller Gear)
Servo Positioner.....IN-SRV-1

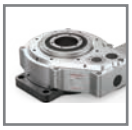

PGM Series
Parallel Gear Servo Positioner...IN-SRV-19

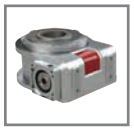

RSD Series
Rotary Servo Drives.....IN-SRV-25

Mechanical Indexers

RDM Series
Rotary Index Drive IN-MCH-1

RD Series
Roller Dial Index Drive..... IN-MCH-42

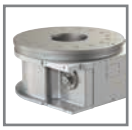

E Series
Heavy-Duty Index Drive IN-MCH-54

RA Series
Right Angle Index Drive IN-MCH-66

RGD/RGS Series
Roller Gear Index Drive IN-MCH-76

P Series
Parallel Shaft/Flange Drive.... IN-MCH-96

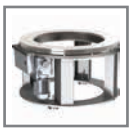

RNG Series
Ring Drive Dial Indexer.. IN-MCH-108

OVERLOAD CLUTCHES

Overload Clutches
Output Overload..... IN-CLU-1

CUSTOM CAMS

Custom Cams
Cam Design Solutions IN-CAM-1

CONVEYORS

Rite-Link Series
Thin-Profile..... IN-CNV-1

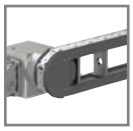

Precision Link Series
Table-Top IN-CNV-4

Precision Link Series
Heavy-Duty IN-CNV-16

PARTS HANDLERS

LPP Series
Linear Part Handlers IN-PRT-2

RPP Series
Rotary Part Handlers IN-PRT-8

Dimensions and technical information are subject to change without notice

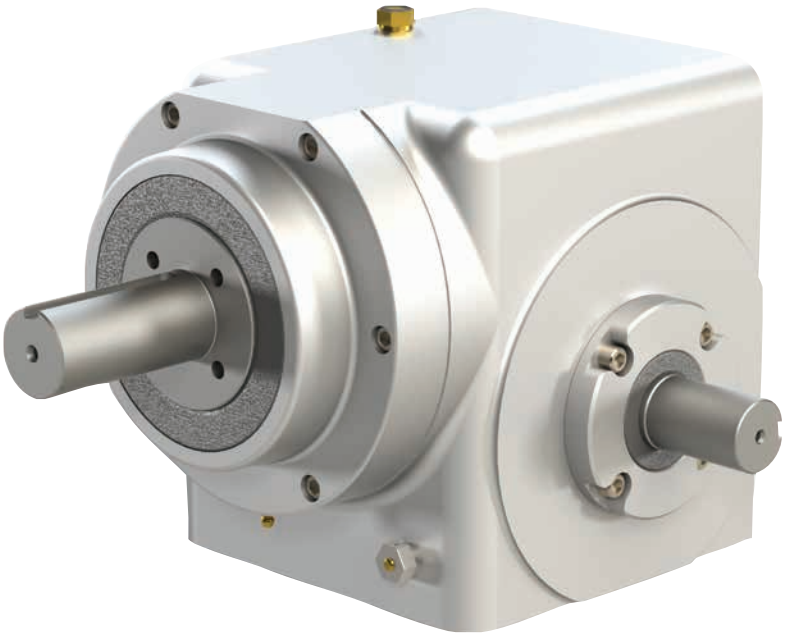

Features:

CAMCO Right Angle Index Drives are ideal for dial applications or actuation-type applications such as driving a linkage or in-line conveyor.

Fixed center distance between input and output

Hardened, ground barrel cam

Compact design requiring minimum use of floor space.

Preloaded "rib-centered" design with modified-sine motion provides smooth acceleration and deceleration with precision positioning.

Universal mounting available on RA models.

Table of Contents

How to Order 67

400RA 69

512RA 71

662RA 73

RA SERIES

Right Angle Index Drive | How to Order

Indexer Ordering Procedure

1. Model
2. Input Shaft Configuration
   - Side 1
   - Side 2
   - Double Input – DI (Standard)
4. Indexer Mounting Position: 1-6
5. Indexer Housing Mounting Holes: Side 1-6 (more than one side can be selected)

Reducer Ordering Procedure

1. Model
2. Ratio: 5:1, 10:1, 15:1, 20:1, 25:1, 30:1, 40:1, 50:1, 60:1
3. Motor Adapter
4. Reducer Input Shaft Extension: Single Input (SE) or Double Input (DE)
5. Mounting (see diagram below)

Input Shaft Configuration (Top View)

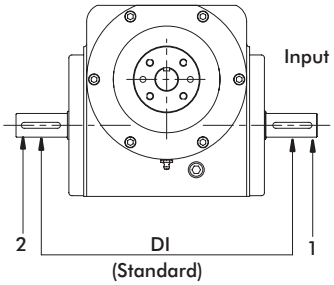

Relative Rotation for Right Hand Cam:

CW Input Side 1 CCW Output
CCW Input Side 2 CCW Output

NOTE: Input can be driven in either direction

Input Shaft Rotation

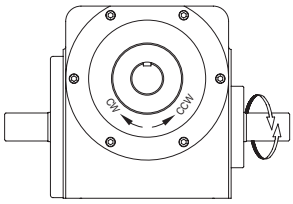

Dimensions and technical information are subject to change without notice

Right Angle Index Drive | Indexer Mounting Position

OVOI (output vertical, over input)	OVUI (output vertical, under input)	OHOI (output horizontal, over input)	OHUI (output horizontal, under input)	H-S1-UP (output horizontal, side 1 up)	H-S2-UP (output horizontal, side 2 up)
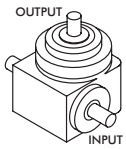 1	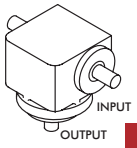 2	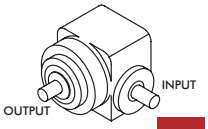 3	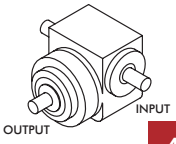 4	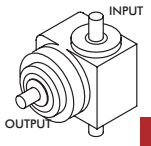 5	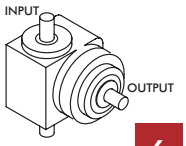 6

Gear Reducer Mounting Positions

	Mounting "A"		Mounting "B"	
	RH	LH	RH	LH
SIDE 1	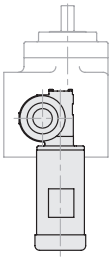 A	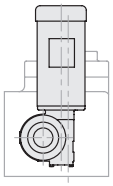 B	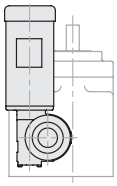 C	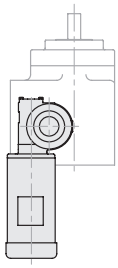 D
SIDE 2	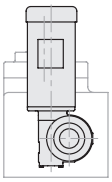 E	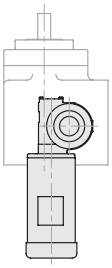 F	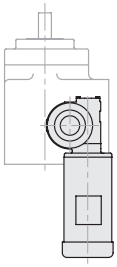 G	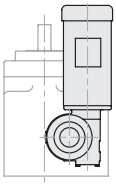 H

	Mounting "C"		Mounting "D"	
	RH	LH	RH	LH
SIDE 1	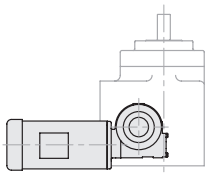 J	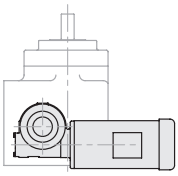 K	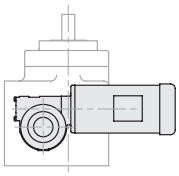 L	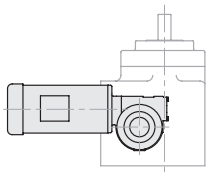 M
SIDE 2	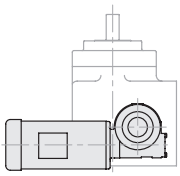 N	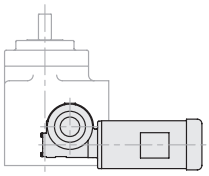 P	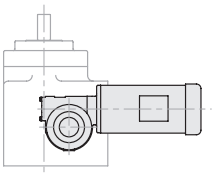 R	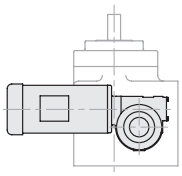 S

400RA SERIES

Right Angle Index Drive | Dimensions

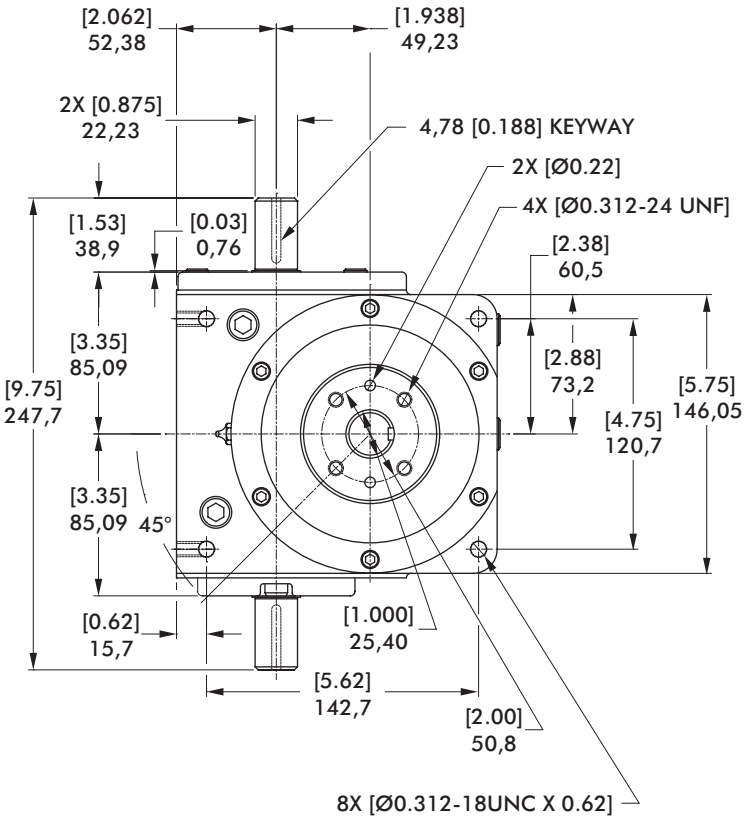

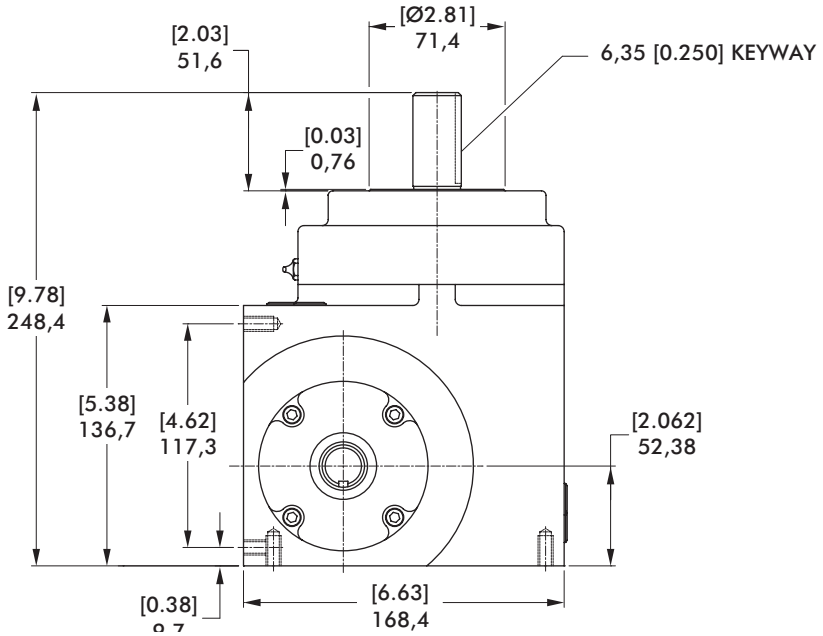

mm [INCH]

THIRD ANGLE PROJECTION

Dimensions and technical information are subject to change without notice

400RA Indexer Capacities					
Stops	Index Period	Motion	B_{10} Capacity at 50 RPM N-m [in-lb]	Internal Inertia kg-cm² [lb-in²]	Model
2	330	ms	67 [595]	44 [15]	400RA2H20-330
3	270	ms	180 [1591]	44 [15]	400RA3H24-270
4	270	ms	210 [1858]	44 [15]	400RA4H24-270
	180	ms	237 [2098]	44 [15]	400RA4H24-180
6	270	ms	193 [1711]	44 [15]	400RA6H24-270
	120	ms	229 [2024]	44 [15]	400RA6H24-120
8	270	ms	224 [1987]	44 [15]	400RA8H24-270
	120	ms	266 [2354]	44 [15]	400RA8H24-120
12	270	ms	146 [1290]	44 [15]	400RA12H20-270
	120	ms	177 [1568]	44 [15]	400RA12H20-120
16	270	ms	161 [1426]	44 [15]	400RA16H20-270 II
	180	ms	333 [2947]	44 [15]	400RA16H24-180 II
24	270	ms	185 [1640]	44 [15]	400RA24H20-270 II
	180	ms	214 [1894]	44 [15]	400RA24H20-180 II

Other Motions (stops and index periods) available. Contact your DESTACO sales representative for more information.

Features

- R180 Reducer (ratios from 15:1 to 60:1)
  - Double Extended Worm Shaft (Input)
  - Worm Shaft Handwheel
- Double Extended Camshaft (Input Shaft)
- 1/3 HP AC Drive Package with Inverter Duty Motor and IM-pAC AC Drive (up to 60 cpm)
- Cycle Cam and Limit Switch Mounted to Camshaft
- Right Hand Cam

Optional Accessories

- 1/3 hp DC motor
- R225 Reducer (ratios from 10:1 to 60:1)
  - 1 hp DC Motor
  - 56C Motor Adapter and Coupling
- Varipak DC Motor Control (up to 30 cpm)
- Output Overload Clutch Models: 2.3F, 2.3FC, 2.3S, 2.3C, 2.3FC-SD, 2.3S-SD, 2.3C-SD
  - Available Settings (in-lb): 400, 600, 700, 850, 1000, 1300, 1800, 2000, 2300
- Dual Cycle Cam and Limit Switch
- Finished cover for ceiling mount or tooling plate mounting
- Left Hand Cam
- Relief in Dwell for shot-pin applications

Output Load Capacity (loads carried during index):

Radial	3603 N [810 lbs]
Thrust/Axial	6254 N [1406 lbs]
Moment	183 N-m [1620 in-lb]

Accuracy ±48 arcsec / ±0,178 mm [±.0007 in] at 76,2 [3 in] Radius

Repeatability ±12 arcsec / ± 0,051 mm [±.0002 in] at 76,2 [3 in] Radius

512RA SERIES

Right Angle Index Drive | Dimensions

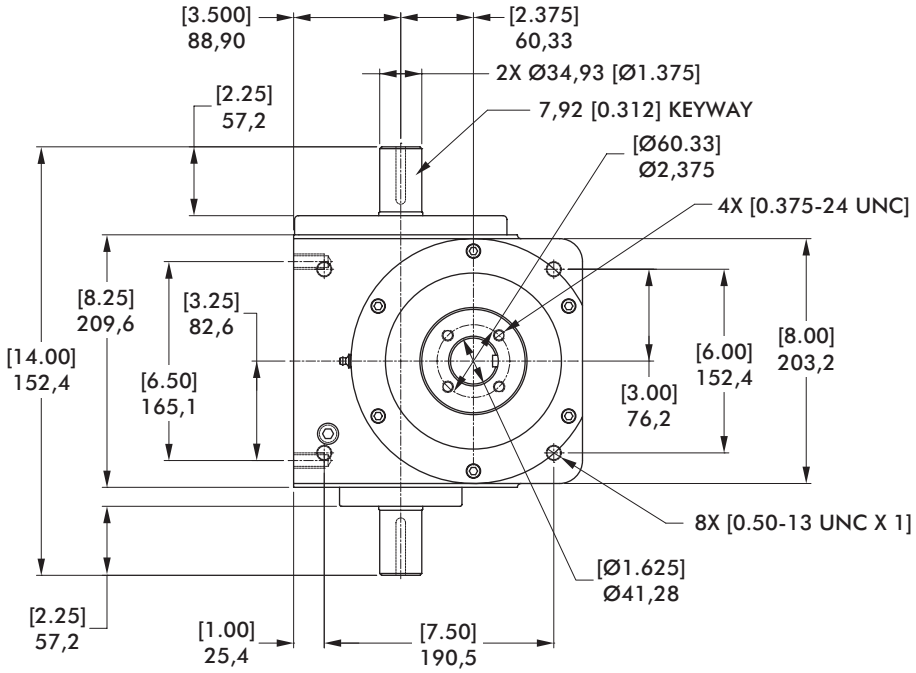

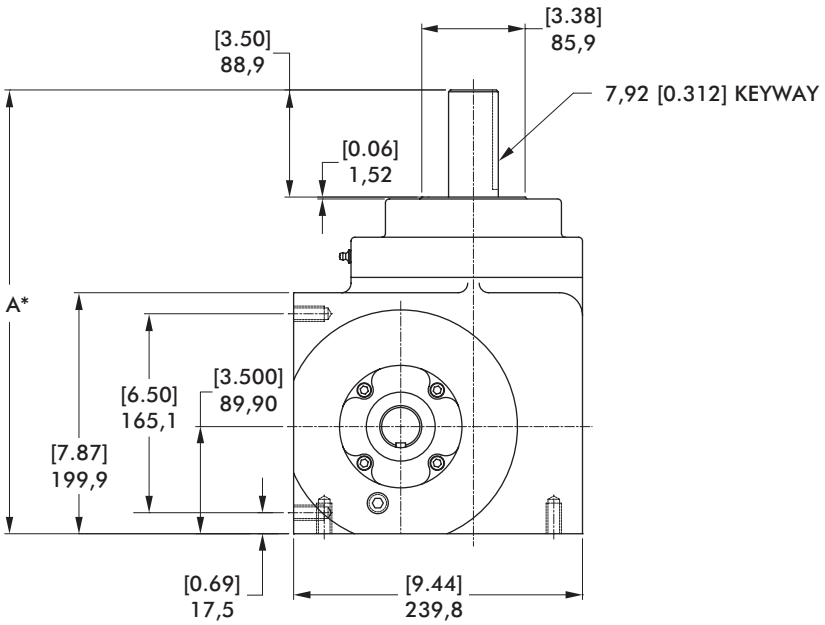

*See table on top of page 8 for dimensions

mm [INCH]

THIRD ANGLE PROJECTION

Dimensions and technical information are subject to change without notice

512RA Indexer Capacities						
Stops	Index Period	Motion	B_{10} Capacity at 50 RPM N-m [in-lb]	Internal Inertia kg-cm² [lb-in²]	Model	A
2	270	msc.33	233 [2061]	132 [45]	512RA2H32-270 MSC.33	379,2 [14.93]
3	270	ms	267 [2360]	132 [45]	512RA3H32-270	368,3 [14.50]
	180	msc.33	322 [2852]	132 [45]	512RA3H32-180 MSC 0.33	379,2 [14.93]
4	270	ms	306 [2710]	132 [45]	512RA4H32-270	368,3 [14.50]
	120	msc.33	412 [3648]	132 [45]	512RA4H32-120 MSC 0.33	379,2 [14.93]
6	270	ms	295 [2613]	132 [45]	512RA6H32-270	368,3 [14.50]
	120	ms	359 [3179]	132 [45]	512RA6H32-120	368,3 [14.50]
8	270	ms	358 [3172]	132 [45]	512RA8H32-270	368,3 [14.50]
	120	ms	430 [3802]	132 [45]	512RA8H32-120	368,3 [14.50]
12	270	ms	309 [2738]	132 [45]	512RA12H28-270	368,3 [14.50]
	120	ms	359 [3176]	132 [45]	512RA12H28-120	379,2 [14.93]

Other Motions (stops and index periods) available. Contact your DESTACO sales representative for more information.

Features

- R225 Reducer (ratios from 10:1 to 60:1)
  - 56C Motor Adapter and Coupling
- Double Extended Camshaft (Input Shaft)
- 1 HP AC Drive Package with Inverter Duty Motor and Inverter Drive (up to 60 cpm)
- Cycle Cam and Limit Switch Mounted to Camshaft
- Right Hand Cam

Optional Accessories

- 1 hp DC motor
- Varipak DC Motor Control (up to 30 cpm)
- Output Overload Clutch Models: 6.0F, 6.0FC, 6.0S and 6.0C, 6.0C-SD, 6.0FC-SD, 6.0S-SD
  - Available Settings (in-lb): 670, 825, 1100, 1400, 1700, 2000, 2300, 2500, 3000, 3800, 4000, 5000, 6000
- Dual Cycle Cam and Limit Switch
- Finished cover for ceiling mount or tooling plate mounting
- Left Hand Cam
- Relief in Dwell for shot-pin applications

Output Load Capacity (loads carried during index):

Radial	8834 N [1,986 lbs]
Thrust/Axial	10129 N [2,277 lbs]
Moment	785 N-m [6,951 in-lb]

Accuracy ±37 arcsec / ±0,028 mm [±.0011 in] at 152,4 [6 in] Radius

Repeatability ±9 arcsec / ± 0,008 mm [±.0003 in] at 152,4 [6 in] Radius

662RA SERIES

Right Angle Index Drive | Dimensions

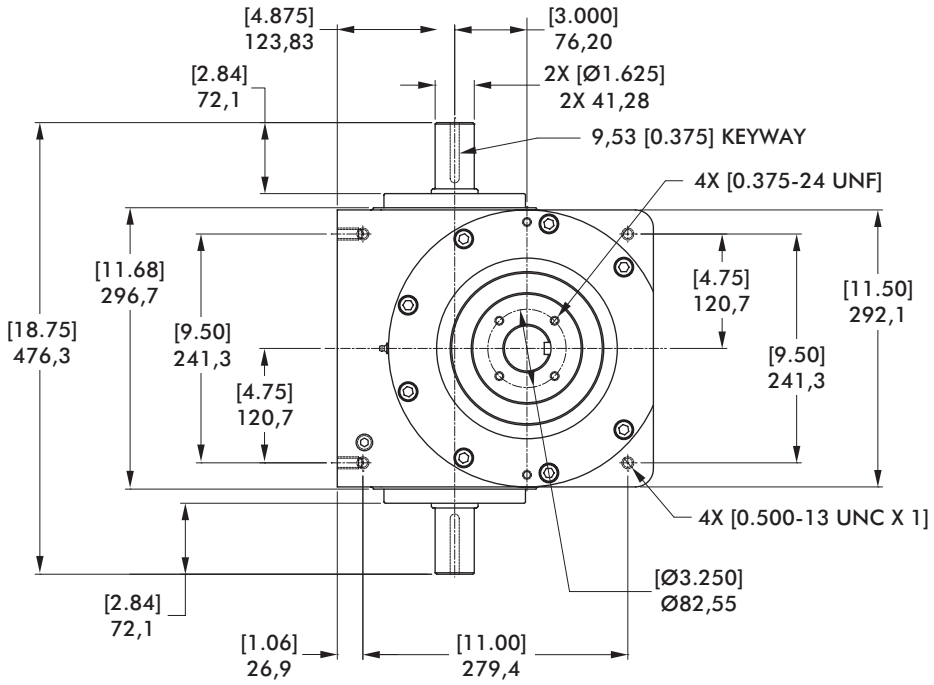

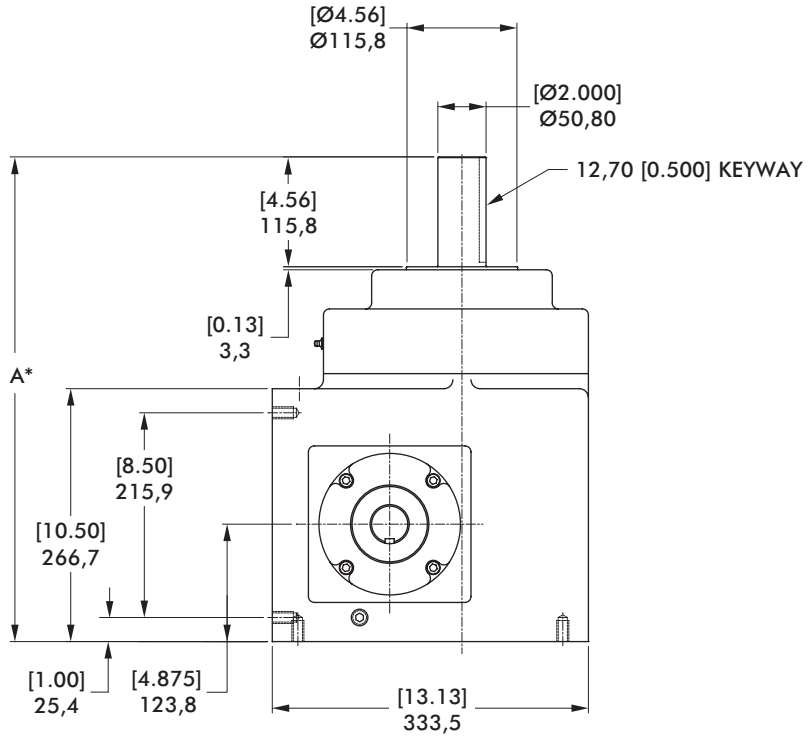

mm [INCH]

THIRD ANGLE PROJECTION

*See table on top of page 8 for dimensions

512RA Indexer Capacities						
Stops	Index Period	Motion	B_{10} Capacity at 50 RPM N-m [in-lb]	Internal Inertia kg-cm² [lb-in²]	Model	A
2	270	msc.33	738 [6534]	503 [172]	512RA2H32-270 MSC.33	379,2 [14.93]
3	270	ms	668 [5913]	495 [169]	512RA3H32-270	368,3 [14.50]
	180	msc.33	694 [6146]	495 [169]	512RA3H32-180 MSC 0.33	379,2 [14.93]
4	270	ms	780 [6903]	503 [172]	512RA4H32-270	368,3 [14.50]
	120	msc.33	876 [7751]	503 [172]	512RA4H32-120 MSC 0.33	379,2 [14.93]
6	270	ms	648 [5734]	495 [169]	512RA6H32-270	368,3 [14.50]
	120	ms	853 [7551]	495 [169]	512RA6H32-120	368,3 [14.50]
8	270	ms	812 [7187]	503 [172]	512RA8H32-270	368,3 [14.50]
	120	ms	1015 [8987]	503 [172]	512RA8H32-120	368,3 [14.50]
12	270	ms	509 [4504]	483 [165]	512RA12H28-270	368,3 [14.50]
	120	ms	625 [5536]	483 [165]	512RA12H28-120	379,2 [14.93]

Other Motions (stops and index periods) available. Contact your DESTACO sales representative for more information.

Features

- 7300C Reducer (ratios from 5:1 to 60:1)
  – Motor Adapter and Coupling
- Double Extended Camshaft (Input Shaft)
- 1 or 2 HP AC Drive Package with Inverter Duty Motor and Inverter Drive (up to 60 cpm)
- Varipak DC Motor Control (up to 30 cpm)
- Cycle Cam and Limit Switch Mounted to Camshaft
- Right Hand Cam

Optional Accessories

- 1 hp DC motor
- 7350C Reducer (ratios from 5:1 to 60:1)
  – Motor Adapter and Coupling
- 2 hp DC Motor with Varipak DC Motor Control (up to 30 cpm)
- Output Overload Clutch Models: 11F, 11FC, 11FC-SD
  – Available Settings (in-lb): 2300, 4000, 6000, 8500, 11,000
- Dual Cycle Cam and Limit Switch
- Finished cover for ceiling mount or tooling plate mounting
- Left Hand Cam
- Relief in Dwell for shot-pin applications

Output Load Capacity (loads carried during index):

Radial	12642 N [2842 lbs]
Thrust/Axial	23304 N [5239 lbs]
Moment	334 N-m [2959 in-lb]

Accuracy ±36 arcsec / ±0,025 mm [±.001 in] at 152,4 [6 in] Radius

Repeatability ±9 arcsec / ± 0,008 mm [±.0003 in] at 152,4 [6 in] Radius

PRECISION INDEXING SOLUTIONS

Table of Contents

INDEXERS

Servo Positioners

GTB Series
Globoidal (Roller Gear)
Servo Positioner.....IN-SRV-1

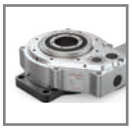

PGM Series
Parallel Gear Servo Positioner...IN-SRV-19

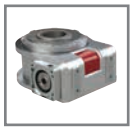

RSD Series
Rotary Servo Drives.....IN-SRV-25

Mechanical Indexers

RDM Series
Rotary Index Drive IN-MCH-1

RD Series
Roller Dial Index Drive..... IN-MCH-42

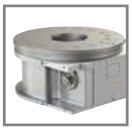

E Series
Heavy-Duty Index Drive IN-MCH-54

RA Series
Right Angle Index Drive IN-MCH-66

RGD/RGS Series
Roller Gear Index Drive IN-MCH-76

P Series
Parallel Shaft/Flange Drive.... IN-MCH-96

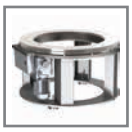

RNG Series
Ring Drive Dial Indexer.. IN-MCH-108

OVERLOAD CLUTCHES

Overload Clutches
Output Overload..... IN-CLU-1

CUSTOM CAMS

Custom Cams
Cam Design Solutions IN-CAM-1

CONVEYORS

Rite-Link Series
Thin-Profile..... IN-CNV-1

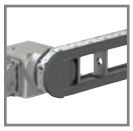

Precision Link Series
Table-Top IN-CNV-4

Precision Link Series
Heavy-Duty IN-CNV-16

PARTS HANDLERS

LPP Series
Linear Part Handlers IN-PRT-2

RPP Series
Rotary Part Handlers IN-PRT-8

Dimensions and technical information are subject to change without notice

Features:

The **CAMCO Roller Gear Index Drives** are robust, versatile units suitable for a wide variety of applications.

Available with a flange (RGD) or shaft (RGS) output

All six surfaces are machined for universal mounting

Optional center thru-hole in flange version facilitates passage of electrical wiring, pneumatic lines or mechanical linkages

Short camshaft motion periods, due to oversized cam design, are well suited for continuous running applications or for special motion requirements such as oscillating motions

Table of Contents

How to Order 77

40RGD/40RGS 79

50RGD/50RGS 81

70RGD/70RGS 83

80RGD/80RGS 85

110RGD/110RGS 87

350RGD/350RGS 89

500RGD/500RGS 91

600RGD/600RGS 93

RGD/RGS SERIES

Roller Gear Index Drive | How To Order

Indexer Ordering Procedure

1. Model
2. Input Shaft Configuration
   - Side 1
   - Side 2
   - Double Input – DI (Standard)
3. Cam Lead (Helix)
   - Right Hand (Standard)
   - Left Hand

NOTE: Input may rotate in either direction to achieve desired direction of output rotation.

4. Indexer Mounting Position: 1-6
5. Indexer Housing Mounting Holes: Side 1-6 (more than one side can be selected)

Reducer Ordering Procedure

1. Model
2. Ratio
   - 10:1, 15:1, 20:1, 25:1, 30:1, 40:1, 50:1, 60:1
3. Motor Adapter
4. Reducer Input Shaft Extension
   - Single Input (SE) or Double Input (DE)
5. Mounting
   - Mounting Position A, B, C, or D
   - Mounted on Indexer Side 1 or Side 2
6. Input Shaft Orientation
   - Left or Right (See Diagram Below)

Input Shaft Configuration (Top View)

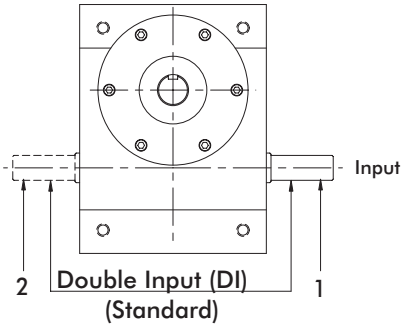

Input Shaft Rotation

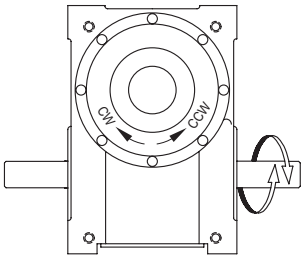

Relative Rotation for Right Hand Cam:

CW Input Side 1 CCW Output

CCW Input Side 2 CCW Output

NOTE: Input can be driven in either direction

Indexer Housing Mounting Holes

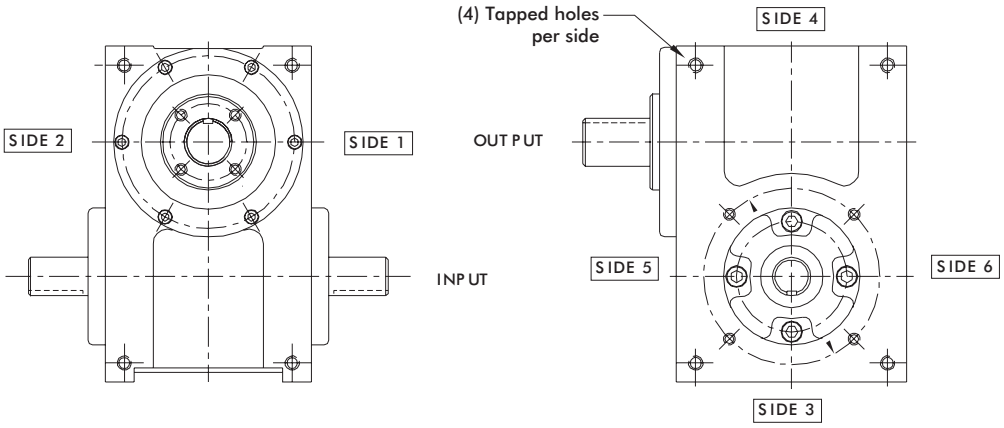

Dimensions and technical information are subject to change without notice

OVOI (output vertical, over input)	OVUI (output vertical, under input)	OHOI (output horizontal, over input)	OHUI (output horizontal, under input)	H-S1-UP (output horizontal, side 1 up)	H-S2-UP (output horizontal, side 2 up)
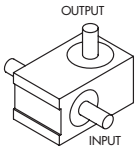 1	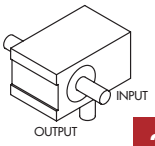 2	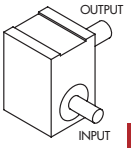 3	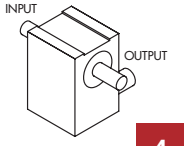 4	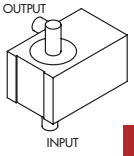 5	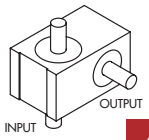 6

Gear Reducer Mounting Positions (Figure 4)

	Mounting "A"		Mounting "B"	
	RH	LH	RH	LH
SIDE 1	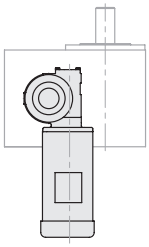 A	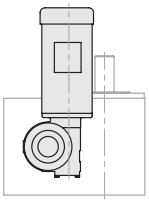 B	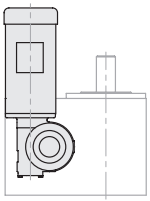 C	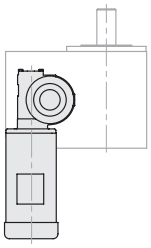 D
SIDE 2	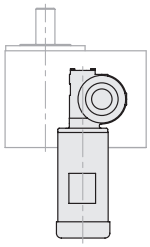 E	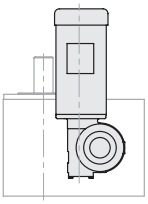 F	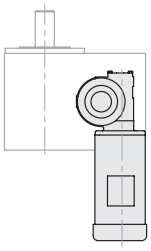 G	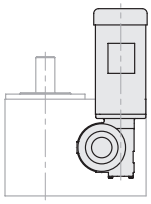 H

	Mounting "C"		Mounting "D"	
	RH	LH	RH	LH
SIDE 1	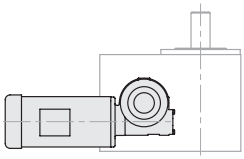 J	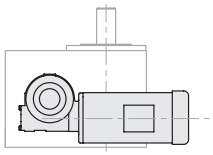 K	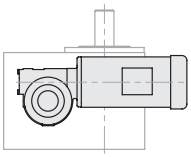 L	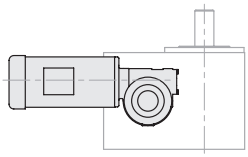 M
SIDE 2	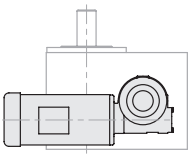 N	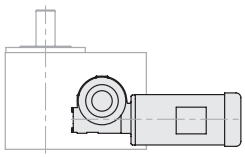 P	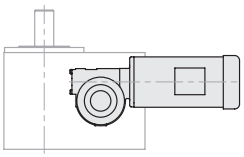 R	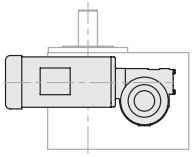 S

40RGD/40RGS SERIES

Roller Gear Index Drive | Dimensions

40RGD

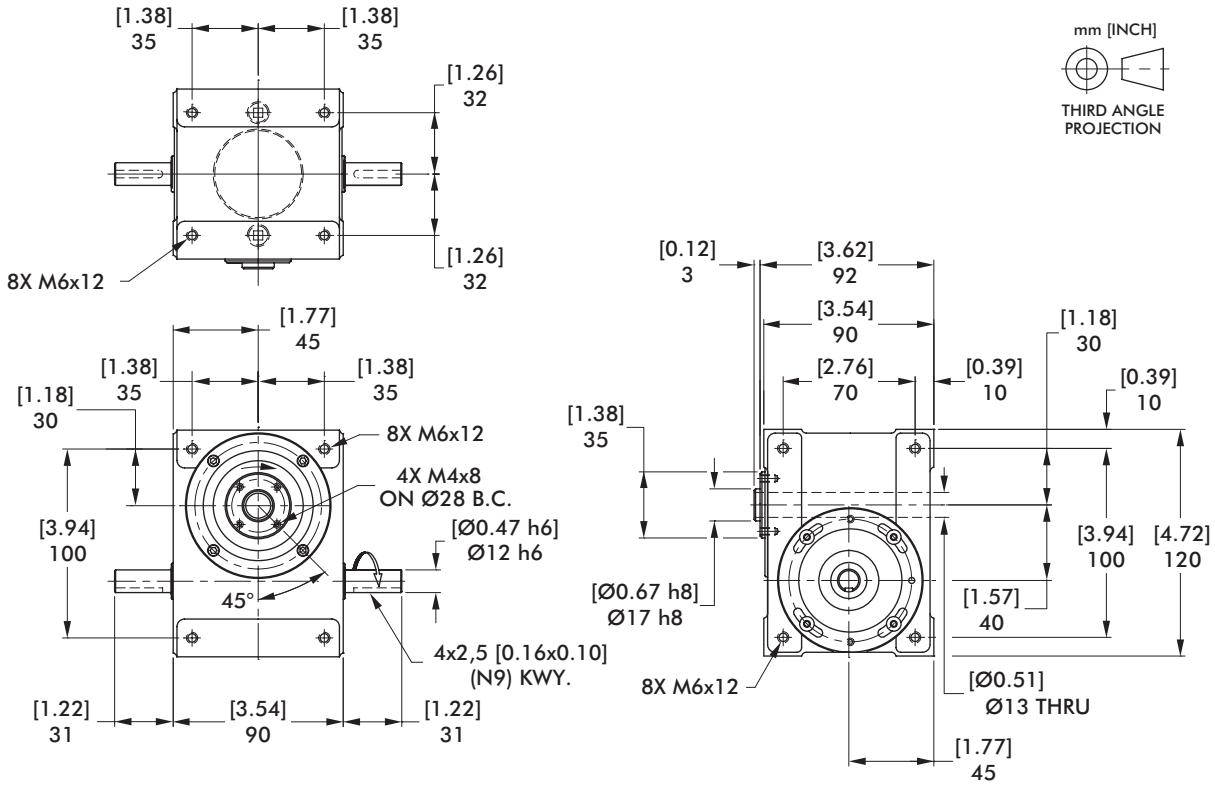

40RGS

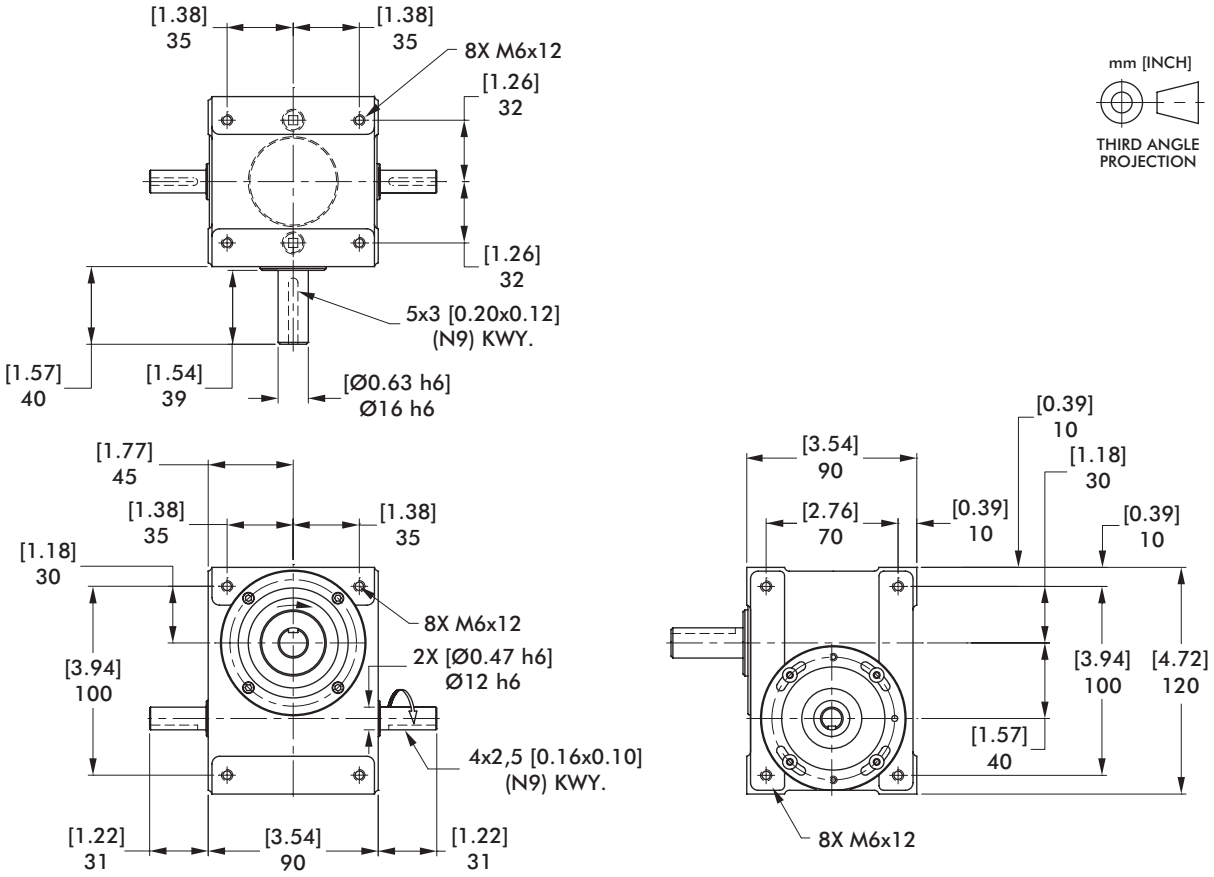

Dimensions and technical information are subject to change without notice

40RGD/40RGS Indexer Capacities						
Stops	Index Period	Motion	B_{10} Capacity at 50 RPM N-m [in-lb]	RGD Internal Inertia kg-cm² [lb-in²]	RGS Internal Inertia kg-cm² [lb-in²]	Model
2	270	ms	17 [150]	0,9 [0.3]	1,2 [0.4]	40RG(D/S)2H12-270
3	270	ms	21 [187]	0,9 [0.3]	1,2 [0.4]	40RG(D/S)3H12-270
4	270	ms	24 [214]	1,2 [0.4]	1,2 [0.4]	40RG(D/S)4H12-270
	180	ms	25 [225]	1,2 [0.4]	1,2 [0.4]	40RG(D/S)4H12-180
6	270	ms	22 [193]	0,9 [0.3]	1,2 [0.4]	40RG(D/S)6H12-270
	90	ms	24 [216]	0,9 [0.3]	1,2 [0.4]	40RG(D/S)6H12-90
8	270	ms	24 [216]	1,2 [0.4]	1,2 [0.4]	40RG(D/S)8H12-270
	90	ms	28 [249]	1,2 [0.4]	1,2 [0.4]	40RG(D/S)8H12-90
12	270	ms	14 [124]	0,9 [0.3]	1,2 [0.4]	40RG(D/S)12H9-270
	90	ms	16 [139]	0,9 [0.3]	1,2 [0.4]	40RG(D/S)12H9-90
16	270	ms	29 [254]	1,2 [0.4]	1,2 [0.4]	40RG(D/S)16H12-270 II
	120	ms	35 [312]	1,2 [0.4]	1,2 [0.4]	40RG(D/S)16H12-120 II
24	180	ms	20 [173]	0,9 [0.3]	1,2 [0.4]	40RG(D/S)24H9-180 II
	120	ms	37 [326]	0,9 [0.3]	1,2 [0.4]	40RG(D/S)24H12-120 III

Other Motions (stops and index periods) available. Contact your DESTACO sales representative for more information.

Features

- Fully Metric
- Universal Mounting: mounting holes on any of 6 sides
- Center Through Hole (Ø13 mm [Ø.50 in]) in RGD model.
- Right Hand Cam

Optional Accessories

- STM RMI28 Gear Reducer (ratios from 7:1 to 100:1) with
  – IEC56B14 Motor Adapter
  – 1/12 HP AC Motor and Inverter Drive (up to 60 cpm)
- Single or Dual Cycle Cam and Limit Switch
- Left Hand Cam
- Relief in Dwell for shot-pin applications

Output Load Capacity (loads carried during index):

	RGD	RGS
Radial	4924 N [1107 lbs]	916 N [206 lbs]
Thrust/Axial	3519 N [791 lbs]	2189 N [492 lbs]
Moment	86 N-m [762 in-lb]	46 N-m [405 in-lb]

Accuracy ±90 arcsec / ±0,033 mm [±.0013 in] at 76,2 mm [3 in] Radius

Repeatability ±22 arcsec / ±0,008 mm [±.0003 in] at 76,2 mm [3 in] Radius

50RGD/50RGS SERIES

Roller Gear Index Drive | Dimensions

50RGD

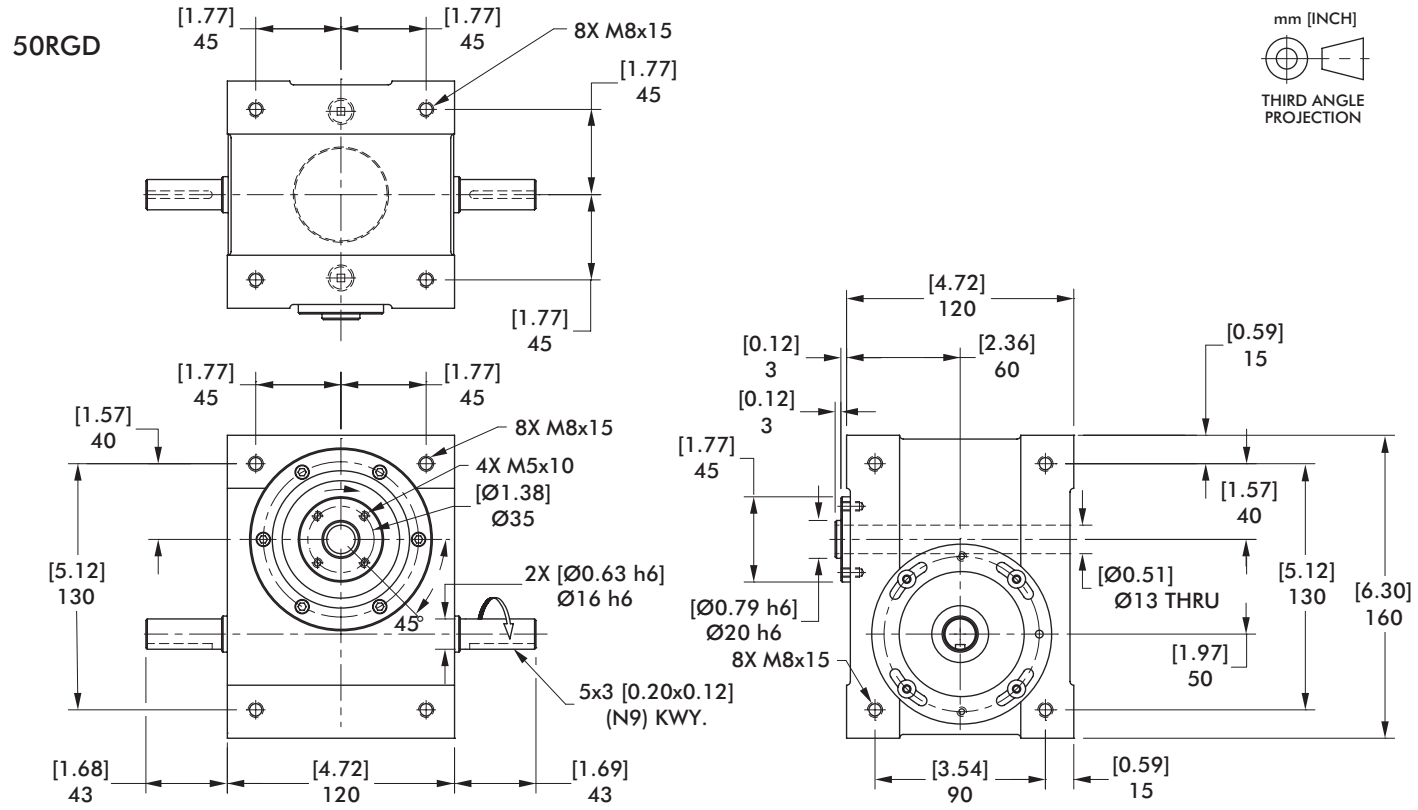

50RGS

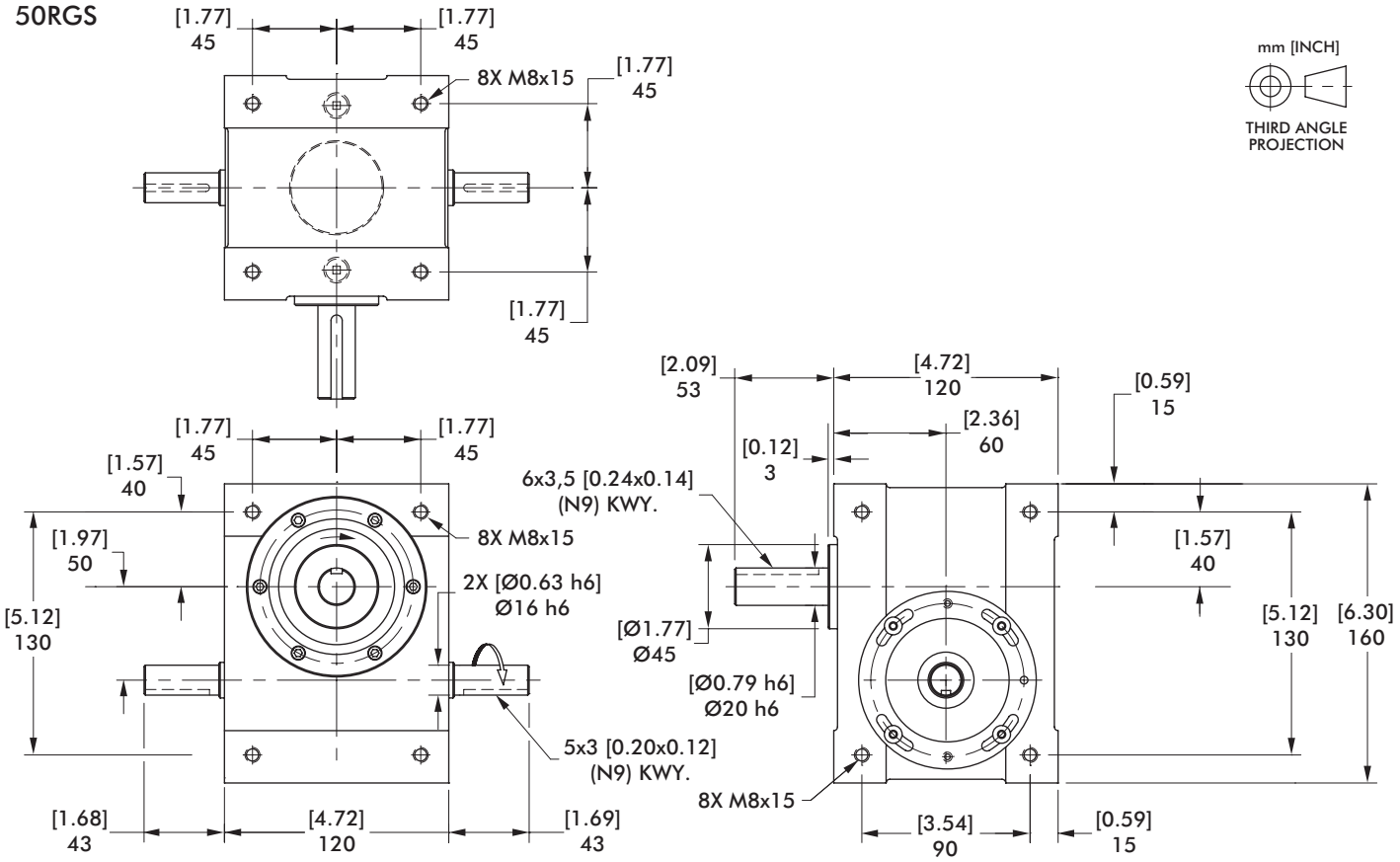

Dimensions and technical information are subject to change without notice

40RGD/40RGS Indexer Capacities						
Stops	Index Period	Motion	B_{10} Capacity at 50 RPM N-m [in-lb]	RGD Internal Inertia kg-cm² [lb-in²]	RGS Internal Inertia kg-cm² [lb-in²]	Model
2	270	msc.50	70 [621]	4,1 [1.4]	4,7 [1.6]	50RG(D/S)2H18-270
3	270	ms	32 [287]	3,8 [1.3]	4,4 [1.5]	50RG(D/S)3H14-270
	180	ms	34 [300]	3,8 [1.3]	4,4 [1.5]	50RG(D/S)3H14-180
4	270	ms	37 [326]	4,1 [1.4]	4,4 [1.5]	50RG(D/S)4H14-270
	180	ms	40 [351]	4,1 [1.4]	4,4 [1.5]	50RG(D/S)4H14-180
6	270	ms	68 [606]	4,1 [1.4]	4,7 [1.6]	50RG(D/S)6H18-270
	90	ms	83 [734]	4,1 [1.4]	4,7 [1.6]	50RG(D/S)6H18-90
8	270	ms	38 [336]	4,1 [1.4]	4,4 [1.5]	50RG(D/S)8H14-270
	90	ms	46 [403]	4,1 [1.4]	4,4 [1.5]	50RG(D/S)8H14-90
12	270	ms	31 [275]	4,1 [1.4]	4,4 [1.5]	50RG(D/S)12H12-270
	90	ms	37 [329]	4,1 [1.4]	4,4 [1.5]	50RG(D/S)12H12-90
16	180	ms	51 [447]	4,1 [1.4]	4,4 [1.5]	50RG(D/S)16H14-180 II
24	180	ms	42 [374]	4,1 [1.4]	4,4 [1.5]	50RG(D/S)24H12-180 II
	120	ms	46 [409]	4,1 [1.4]	4,4 [1.5]	50RG(D/S)24H12-120 II

Other Motions (stops and index periods) available. Contact your DESTACO sales representative for more information.

Features

- Fully Metric
- Universal Mounting: mounting holes on any of 6 sides
- Center Through Hole (Ø15 mm [Ø.59 in]) in RGD model.
- Right Hand Cam

Optional Accessories

- R180 Reducer (Ratios from 15:1 to 60:1)
  – Double Extended Worm Shaft (Input)
  – Worm Shaft Handwheel
- 1/3 HP AC Drive Package with Inverter Duty Motor and IM-pAC AC Drive (up to 60 cpm)
- Cycle Cam and Limit Switch Mounted to Camshaft
- Right Hand Cam
- Universal Mounting Capability

Output Load Capacity (loads carried during index):

	RGD	RGS
Radial	7896 N [1775 lbs]	1686 N [379 lbs]
Thrust/Axial	4115 N [925 lbs]	2424 N [545 lbs]
Moment	178 N-m [1572 in-lb]	89 N-m [791 in-lb]

Accuracy ±73 arcsec / ±0,028 mm [±.0011 in] at 76,2 mm [3 in] Radius

Repeatability ±18 arcsec / ±0,008 mm [±.0003 in] at 76,2 mm [3 in] Radius

70RGD/70RGS SERIES

Roller Gear Index Drive | Dimensions

70RGD

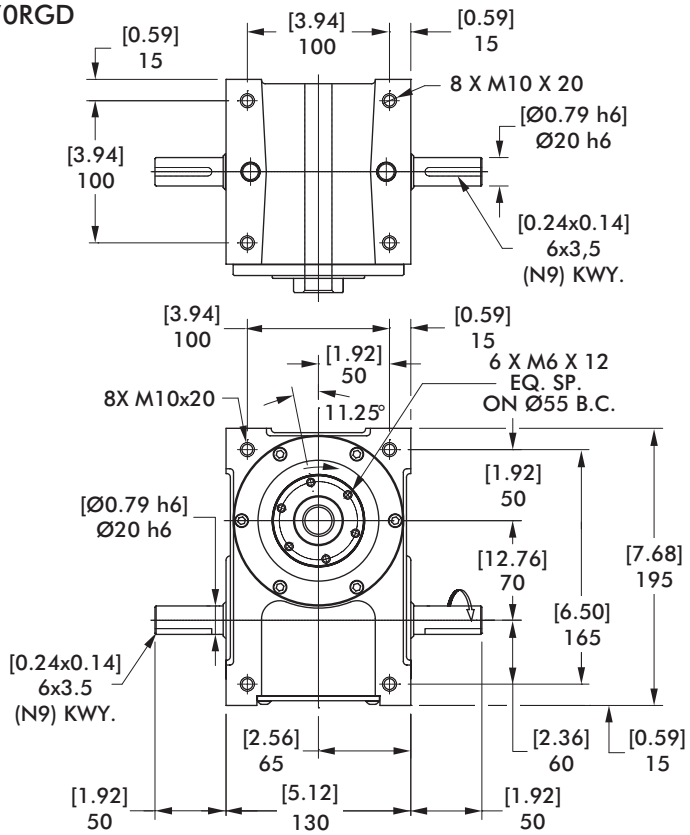

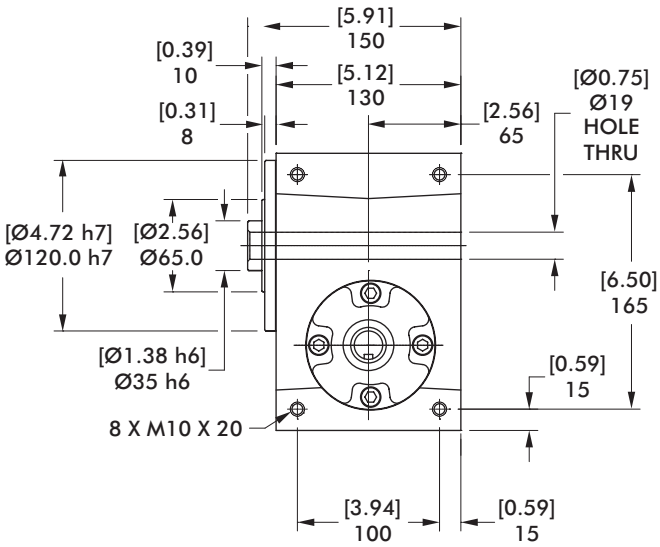

70RGS

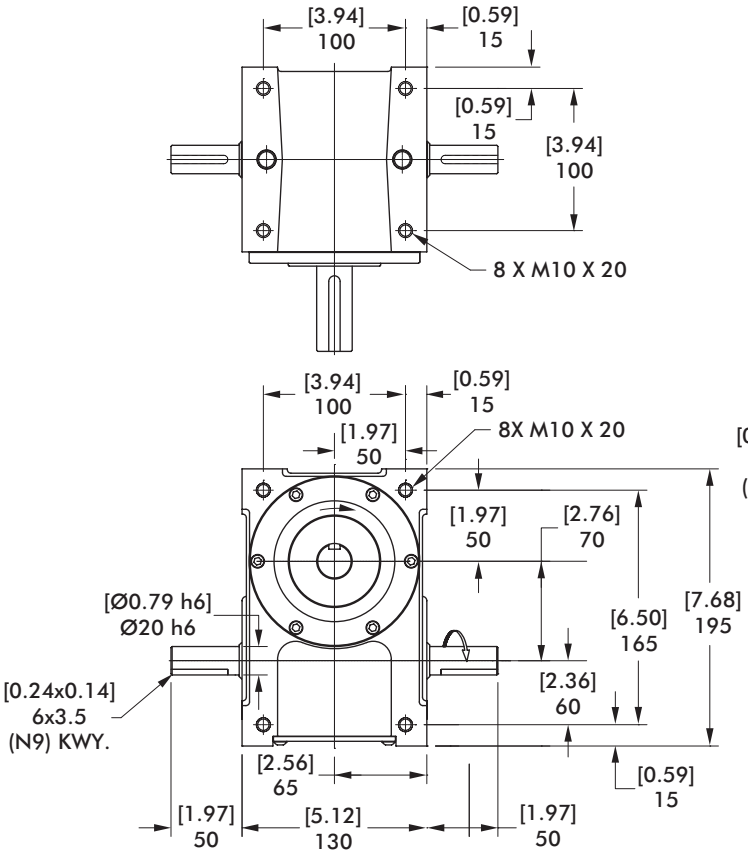

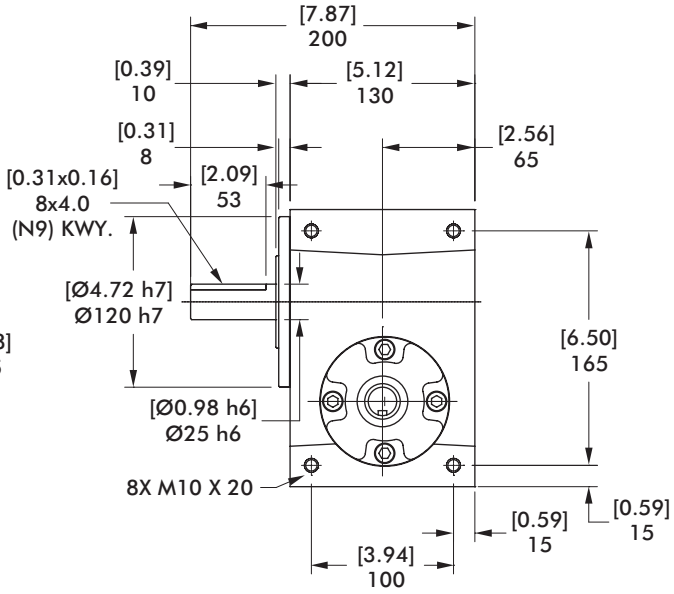

Dimensions and technical information are subject to change without notice

40RGD/40RGS Indexer Capacities						
Stops	Index Period	Motion	B_{10} Capacity at 50 RPM N-m [in-lb]	RGD Internal Inertia kg-cm² [lb-in²]	RGS Internal Inertia kg-cm² [lb-in²]	Model
2	270	ms	66 [585]	20,5 [7]	23,4 [8]	70RG(D/S)2H20-270
	180	ms	63 [562]	20,5 [7]	23,4 [8]	70RG(D/S)2H18-180
3	270	ms	81 [720]	20,5 [7]	23,4 [8]	70RG(D/S)3H20-270
	180	ms	85 [753]	20,5 [7]	23,4 [8]	70RG(D/S)3H20-180
4	270	ms	93 [821]	26,3 [9]	29,3 [10]	70RG(D/S)4H20-270
	120	msc,33	125 [1107]	29,3 [10]	29,3 [10]	70RG(D/S)4H18-120
6	270	ms	159 [1406]	26,3 [9]	29,3 [10]	70RG(D/S)6H24-270
	90	msc,33	238 [2110]	26,3 [9]	29,3 [10]	70RG(D/S)6H24-90
8	270	ms	96 [853]	26,3 [9]	29,3 [10]	70RG(D/S)8H20-270
	90	ms	120 [1063]	26,3 [9]	29,3 [10]	70RG(D/S)8H20-90
12	270	ms	53 [470]	29,3 [10]	29,3 [10]	70RG(D/S)12H14-270
	90	ms	66 [584]	29,3 [10]	29,3 [10]	70RG(D/S)12H14-90
24	180	ms	72 [635]	29,3 [10]	29,3 [10]	70RG(D/S)24H14-180 II

Other Motions (stops and index periods) available. Contact your DESTACO sales representative for more information.

Features

- Fully Metric
- Universal Mounting: mounting holes on any of 6 sides
- Center Through Hole (Ø19 mm [Ø.75 in]) in RGD model.
- Right Hand Cam

Optional Accessories

- R180 Reducer (Ratios from 5:1 to 60:1)
- 1/3 HP AC Drive Package with Inverter Duty Motor and Inverter Drive (up to 60 cpm)
- 1/3 HP DC Motor with Varipak DC Motor Control (up to 30 cpm)
- Single or Dual Cycle Cam and Limit Switch
- Left Hand Cam
- Relief in Dwell for shot-pin applications

Output Load Capacity (loads carried during index):

	RGD	RGS
Radial	12602 N [2833 lbs]	2491 N [560 lbs]
Thrust/Axial	9893 N [2224 lbs]	3567 N [802 lbs]
Moment	410 N-m [3626 in-lb]	175 N-m [1545 in-lb]

Accuracy ±50 arcsec / ±0,020 mm [±.0008 in] at 76,2 mm [3 in] Radius

Repeatability ±13 arcsec / ±0,005 mm [±.0002 in] at 76,2 mm [3 in] Radius

80RGD/80RGS SERIES

Roller Gear Index Drive | Dimensions

80RGD

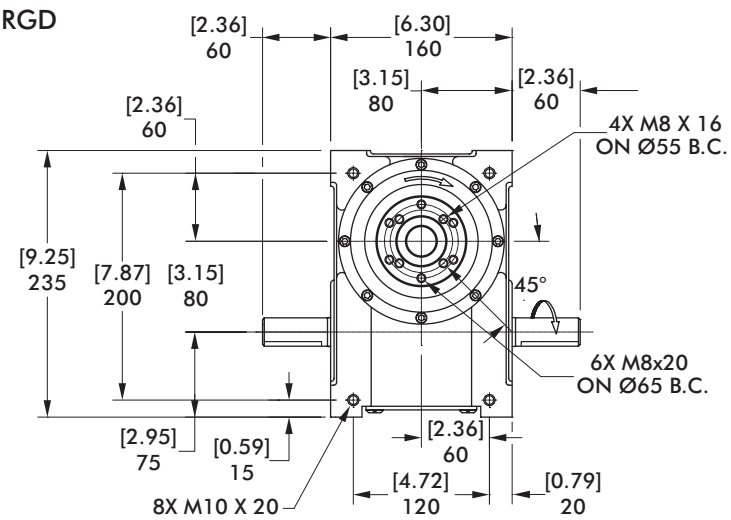

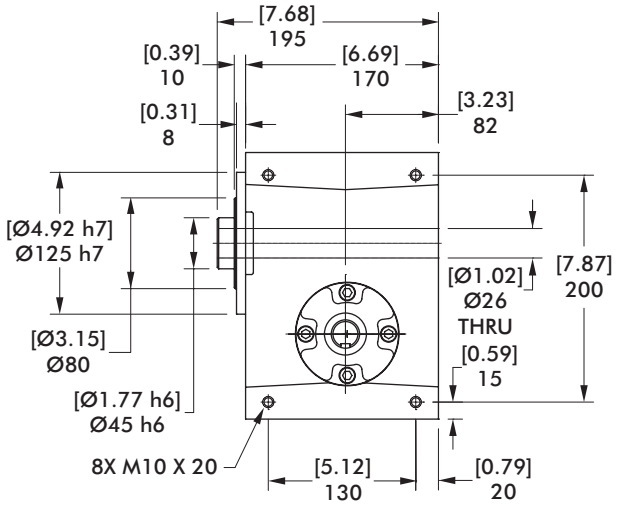

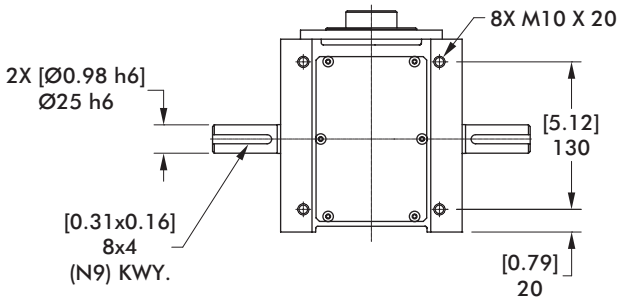

mm [INCH]

THIRD ANGLE PROJECTION

80RGS

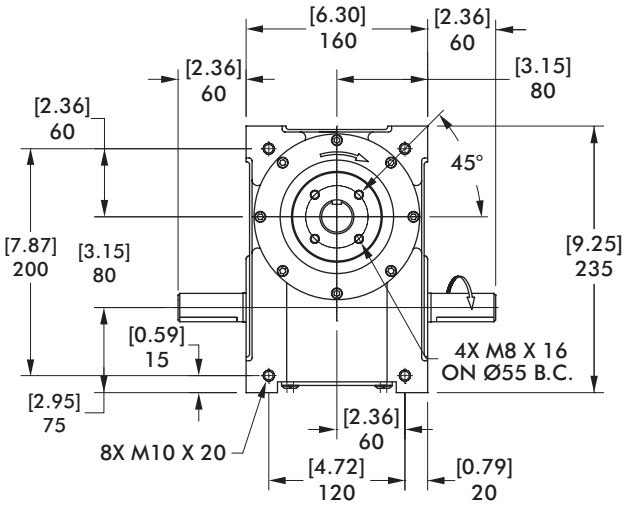

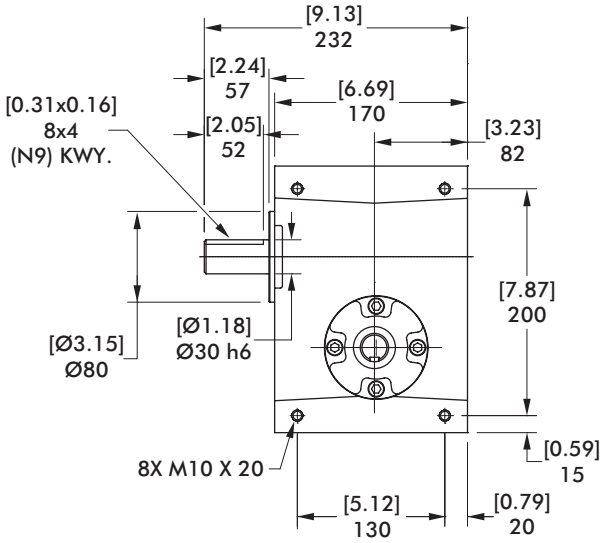

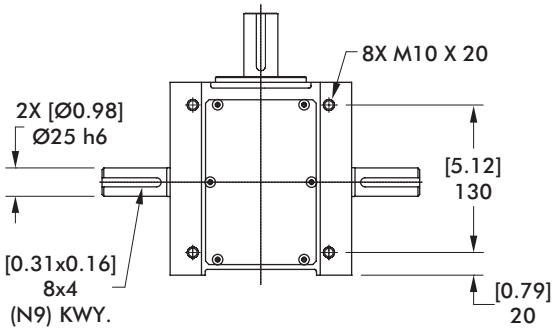

mm [INCH]

THIRD ANGLE PROJECTION

Dimensions and technical information are subject to change without notice

40RGD/40RGS Indexer Capacities						
Stops	Index Period	Motion	B_{10} Capacity at 50 RPM N-m [in-lb]	RGD Internal Inertia kg-cm² [lb-in²]	RGS Internal Inertia kg-cm² [lb-in²]	Model
2	330	ms	129 [1144]	46,8 [16]	49,7 [17]	80RG(D/S)2H24-330
	270	msc.33	157 [1388]	46,8 [16]	49,7 [17]	80RG(D/S)2H24-270
3	270	ms	161 [1422]	46,8 [16]	49,7 [17]	80RG(D/S)3H24-270
	180	ms	171 [1513]	46,8 [16]	49,7 [17]	80RG(D/S)3H24-180
4	270	ms	188 [1663]	61,5 [21]	61,5 [21]	80RG(D/S)4H24-270
	180	msc.33	269 [2377]	61,5 [21]	61,5 [21]	80RG(D/S)4H24-180
6	270	ms	172 [1524]	52,7 [18]	55,6 [19]	80RG(D/S)6H28-270
	90	msc.50	262 [2323]	52,7 [18]	55,6 [19]	80RG(D/S)6H28-90
8	270	ms	196 [1733]	61,5 [21]	61,5 [21]	80RG(D/S)8H24-270
	90	msc.33	332 [2937]	61,5 [21]	61,5 [21]	80RG(D/S)8H24-90
12	270	ms	114 [1011]	58,5 [20]	58,5 [20]	80RG(D/S)12H18-270
	90	msc.60	195 [1725]	58,5 [20]	58,5 [20]	80RG(D/S)12H18-90

Other Motions (stops and index periods) available. Contact your DESTACO sales representative for more information.

Features

- Fully Metric
- Universal Mounting: mounting holes on any of 6 sides
- Center Through Hole (Ø26 mm [Ø1.02 in]) in RGD model.
- Right Hand Cam

Optional Accessories

- R180 Reducer (Ratios from 5:1 to 60:1)
- 1/3 HP AC Drive Package with Inverter Duty Motor and Inverter Drive (up to 60 cpm)
- 1/3 HP DC Motor with Varipak DC Motor Control (up to 30 cpm)
- Single or Dual Cycle Cam and Limit Switch
- Left Hand Cam
- Relief in Dwell for shot-pin applications

Output Load Capacity (loads carried during index):

	RGD	RGS
Radial	21,307 N [4790 lbs]	5289 N [1189 lbs]
Thrust/Axial	15435 N [3470 lbs]	5542 N [1246 lbs]
Moment	852 N-m [7544 in-lb]	302 N-m [2669 in-lb]

Accuracy ±48 arcsec / ±0,018 mm [±.0007 in] at 76,2 mm [3 in] Radius

Repeatability ±12 arcsec / ±0,005 mm [±.0002 in] at 76,2 mm [3 in] Radius

110RGD/110RGS SERIES

Roller Gear Index Drive | Dimensions

110RGD

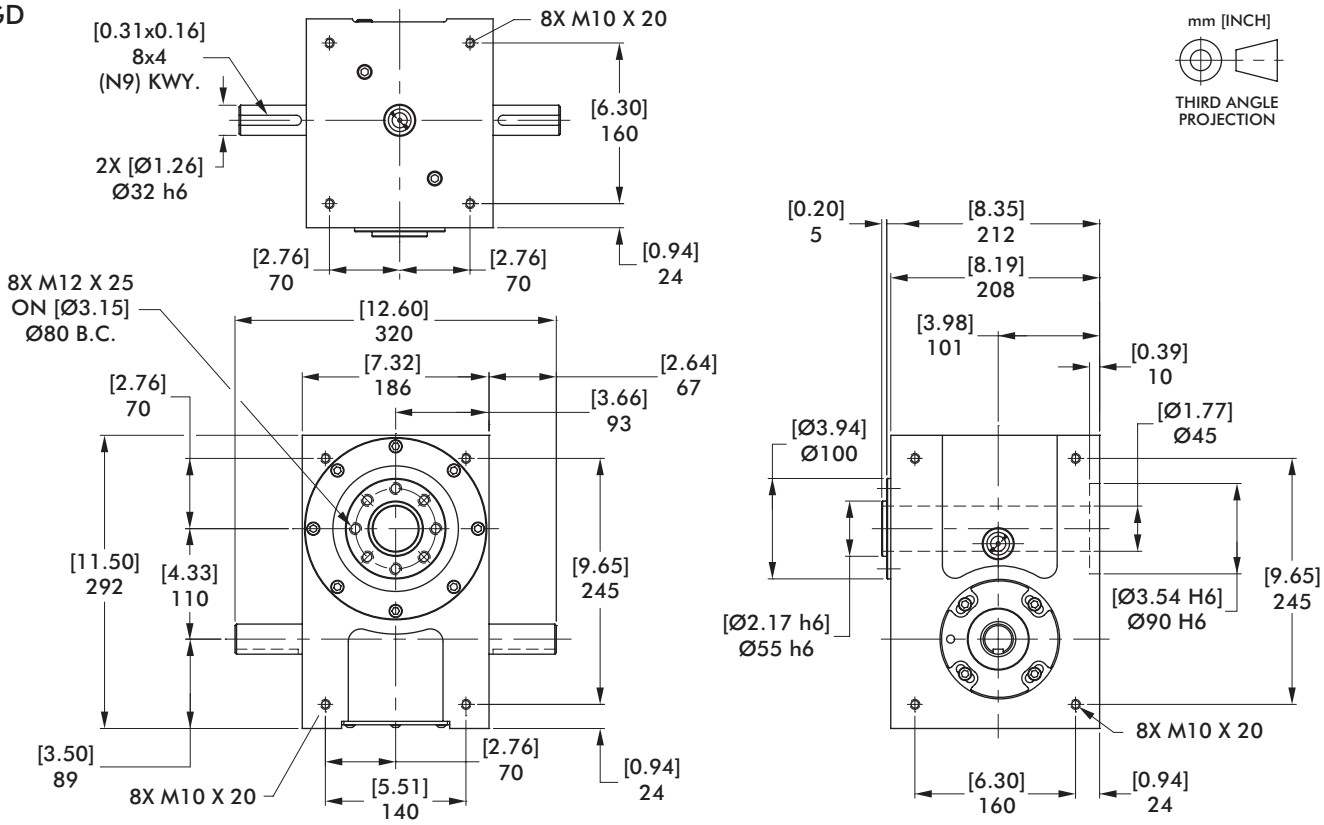

110RGS

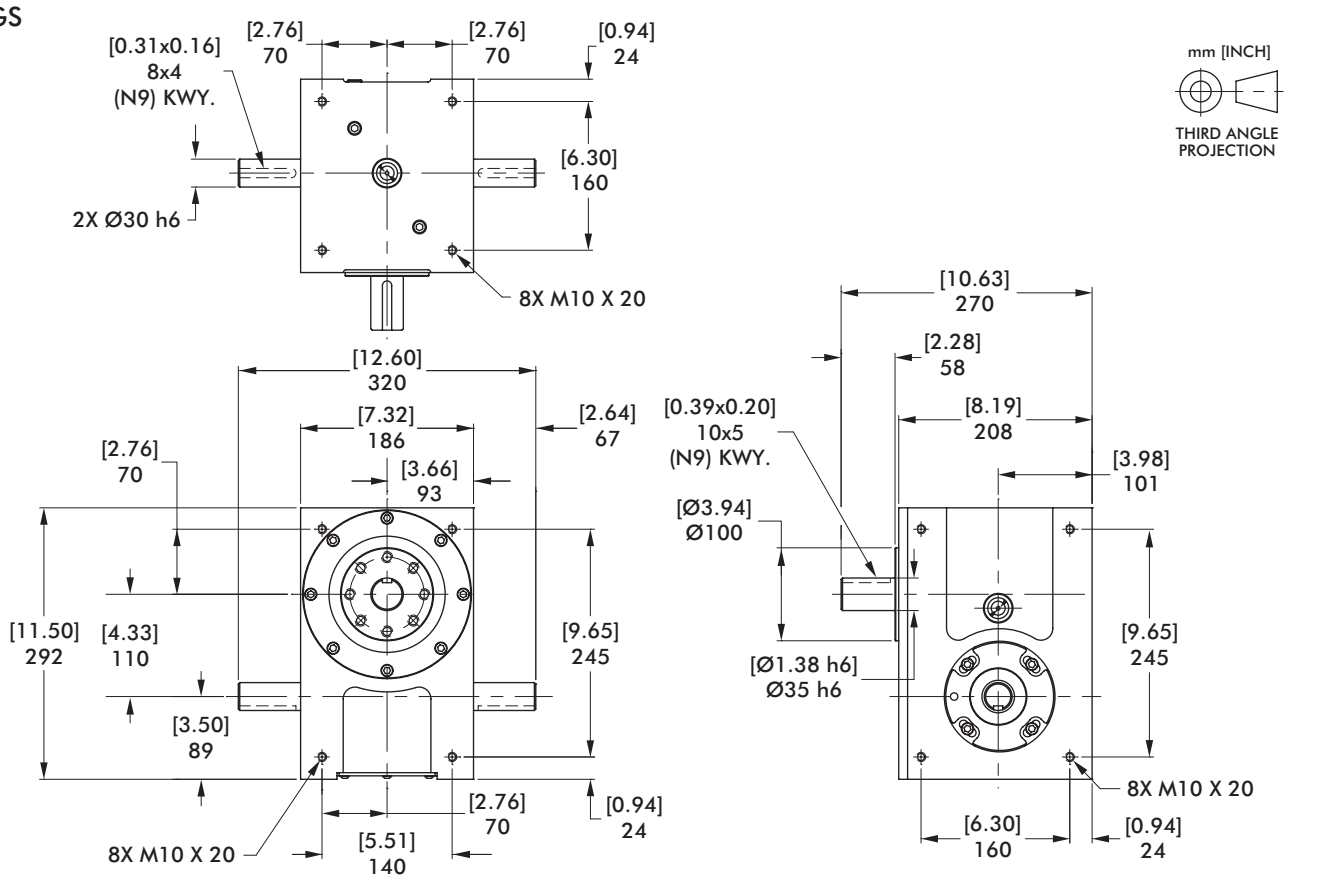

Dimensions and technical information are subject to change without notice

110RGD/110RGS Indexer Capacities						
Stops	Index Period	Motion	B_{10} Capacity at 50 RPM N-m [in-lb]	RGD Internal Inertia kg-cm² [lb-in²]	RGS Internal Inertia kg-cm² [lb-in²]	Model
2	300	msc.33	596 [5271]	149,2 [51]	163,9 [56]	110RG(D/S)2H40-300
	270	msc.50	692 [6126]	149,2 [51]	163,9 [56]	110RG(D/S)2H40-270
3	270	ms	634 [5609]	149,2 [51]	163,9 [56]	110RG(D/S)3H40-270
	180	msc.50	885 [7829]	149,2 [51]	163,9 [56]	110RG(D/S)3H40-180
4	270	ms	371 [3282]	140,5 [48]	161,0 [55]	110RG(D/S)4H32-270
	180	msc.33	469 [4147]	140,5 [48]	161,0 [55]	110RG(D/S)4H32-180
6	270	ms	834 [7378]	152,2 [52]	204,8 [70]	110RG(D/S)6H48-270
	120	msc.33	918 [8127]	149,2 [51]	163,9 [56]	110RG(D/S)6H40-120
8	270	ms	389 [3440]	140,5 [48]	161,0 [55]	110RG(D/S)8H32-270
	120	ms	469 [4149]	140,5 [48]	161,0 [55]	110RG(D/S)8H32-120
12	270	ms	318 [2815]	137,5 [47]	161,0 [55]	110RG(D/S)12H28-270
	120	ms	380 [3367]	131,7 [45]	149,2 [51]	110RG(D/S)12H24-120
16	270	ms	182 [1610]	131,7 [45]	155,1 [53]	110RG(D/S)16H20-270
	120	ms	225 [1992]	131,7 [45]	155,1 [53]	110RG(D/S)16H20-120
24	270	ms	412 [3650]	131,7 [45]	149,2 [51]	110RG(D/S)24H24-270 II
	180	ms	467 [4134]	131,7 [45]	149,2 [51]	110RG(D/S)24H24-180 II

Other Motions (stops and index periods) available. Contact your DESTACO sales representative for more information.

Features

- Fully Metric
- Universal Mounting: mounting holes on any of 6 sides
- Center Through Hole (Ø45 mm [Ø1.77 in]) in RGD model.
- Right Hand Cam

Optional Accessories

- KH37 Reducer
  – Ratios from 5.36:1 to 106.38:1 (consult factory for exact ratios available)
  – 1 HP AC Drive Package with Inverter Duty Motor and Inverter Drive (up to 60 cpm)
- Single or Dual Cycle Cam and Limit Switch
- Left Hand Cam
- Relief in Dwell for shot-pin applications

Output Load Capacity (loads carried during index):

	RGD	RGS
Radial	24968 N [5613 lbs]	8256 N [1156 lbs]
Thrust/Axial	19621 N [4411 lbs]	9132 N [2053 lbs]
Moment in-lb]	1248 N-m [11050 in-lb]	479 N-m [4238

Accuracy ±30 arcsec / ±0,023 mm [±.0009 in] at 152,4 mm [6 in] Radius

Repeatability ±8 arcsec / ±0,005 mm [±.0002 in] at 152,4 mm [6 in] Radius

350RGD/350RGS SERIES

Roller Gear Index Drive | Dimensions

350RGD

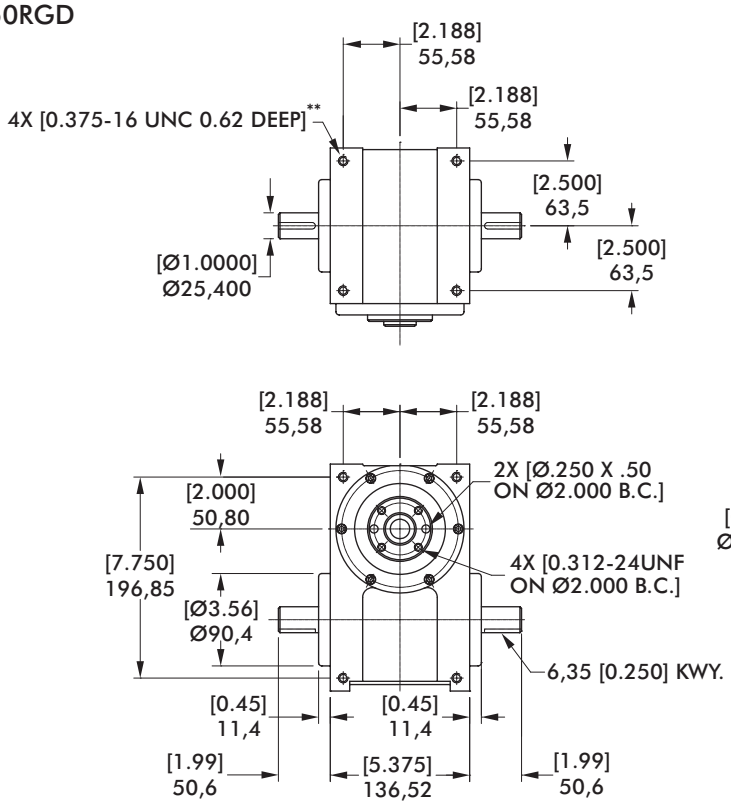

** 4 TAPPED MOUNTING HOLES IN ANY ONE OF SIX FINISHED SIDES, TO BE SPECIFIED BY CUSTOMER

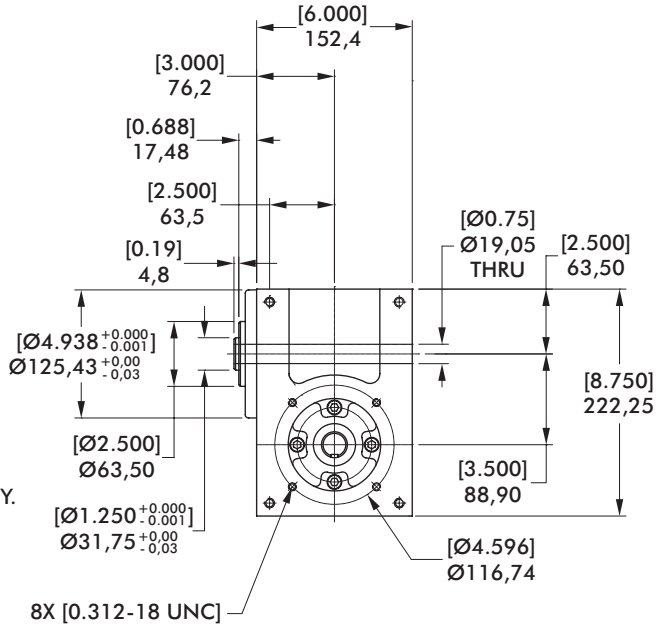

350RGS

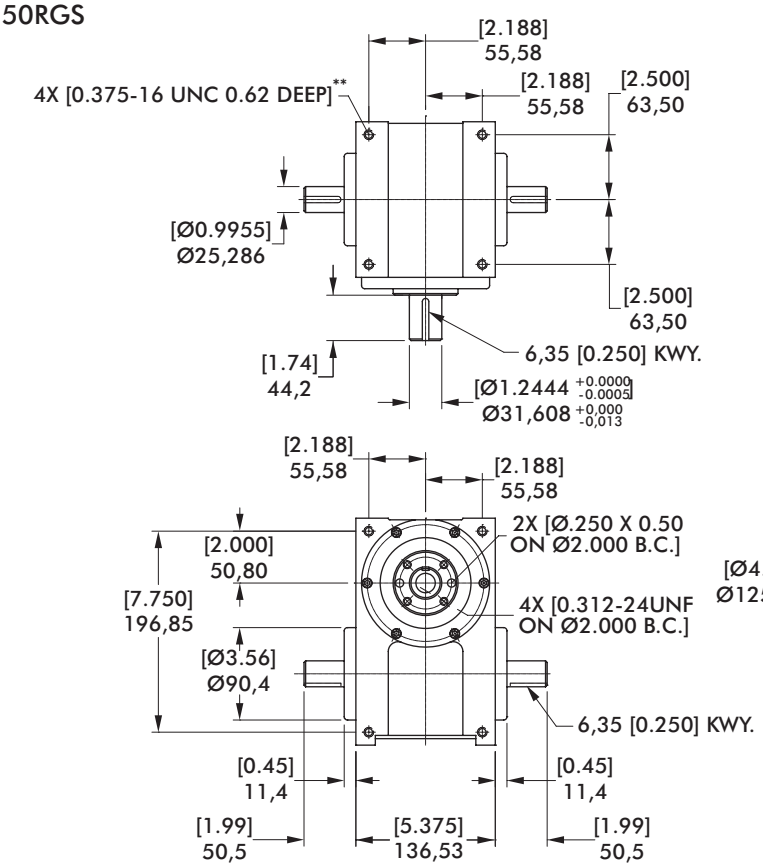

mm [INCH]

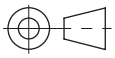

THIRD ANGLE PROJECTION

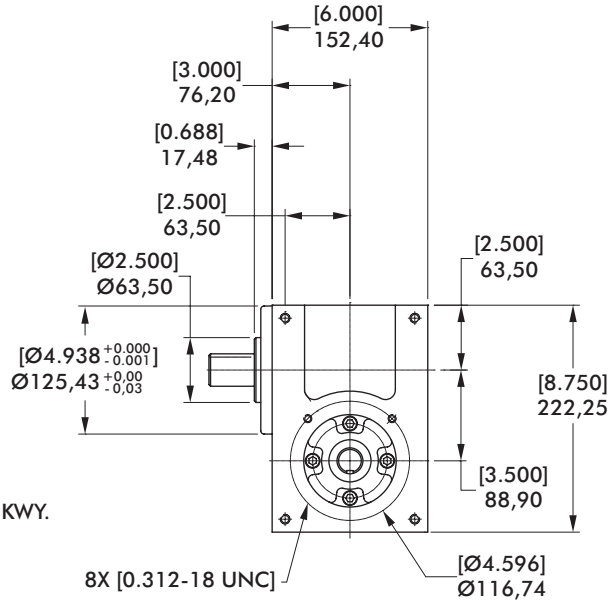

350RGD/350RGS Indexer Capacities						
Stops	Index Period	Motion	B_{10} Capacity at 50 RPM N-m [in-lb]	RGD Internal Inertia kg-cm² [lb-in²]	RGS Internal Inertia kg-cm² [lb-in²]	Model
1	330	msc.50	200 [1774]	22,5 [7.7]	28,4 [9.7]	350RG(D/S)1H24-330
2	270	ms	141 [1244]	22,5 [7.7]	28,4 [9.7]	350RG(D/S)2H24-270
	180	msc.67	231 [2047]	22,5 [7.7]	28,4 [9.7]	350RG(D/S)2H24-180
3	270	ms	173 [1530]	22,5 [7.7]	28,4 [9.7]	350RG(D/S)3H24-270
	180	ms	181 [1601]	22,5 [7.7]	28,4 [9.7]	350RG(D/S)3H24-180
4	300	ms	192 [1701]	23,7 [8.1]	29,6 [10.1]	350RG(D/S)4H24-300
	180	ms	226 [2001]	23,7 [8.1]	29,6 [10.1]	350RG(D/S)4H24-180
6	270	ms	182 [1615]	22,5 [7.7]	28,4 [9.7]	350RG(D/S)6H24-270
	90	ms	233 [2063]	22,5 [7.7]	28,4 [9.7]	350RG(D/S)6H24-90
8	270	ms	208 [1840]	23,7 [8.1]	29,6 [10.1]	350RG(D/S)8H24-270
	90	ms	307 [2716]	23,7 [8.1]	29,6 [10.1]	350RG(D/S)8H24-90
12	270	ms	128 [1132]	23,1 [7.9]	29,0 [9.9]	350RG(D/S)12H20-270
	90	ms	167 [1476]	23,1 [7.9]	29,0 [9.9]	350RG(D/S)12H20-90

Other Motions (stops and index periods) available. Contact your DESTACO sales representative for more information.

Features

- Universal Mounting: mounting holes on any of 6 sides
- Center Through Hole (Ø19.05 mm [Ø.75 in]) in RGD model.
- Right Hand Cam Standard

Optional Accessories

- R180 Reducer (Ratios from 5:1 to 60:1)
  - 1/3 HP AC Drive Package with Inverter Duty Motor and Inverter Drive (up to 60 cpm)
  - 1/3 HP DC Motor with Varipak DC Motor Control (up to 30 cpm)
- R225 Reducer (Ratios from 5:1 to 60:1)
  - 56C Motor Adapter and Coupling
  - 1 HP AC Drive Package with Inverter Duty Motor and Inverter Drive (up to 60 cpm)
  - 1 HP DC Motor with Varipak DC Motor Control (up to 30 cpm)
- Single or Dual Cycle Cam and Limit Switch
- Relief in Dwell for shot-pin applications
- Left Hand Cam
- Relief in Dwell for shot-pin applications

Output Load Capacity (loads carried during index):

	RGD	RGS
Radial	8607 N [1935 lbs]	8042 N [1808 lbs]
Thrust/Axial	6254 N [1406 lbs]	3496 N [786 lbs]
Moment	273 N-m [2419 in-lb]	357 N-m [3164 in-lb]

Accuracy ±41 arcsec / ±0,030 mm [±.0012 in] at 152,4 mm [6 in] Radius

Repeatability ±10 arcsec / ±0,008 mm [±.0003 in] at 152,4 mm [6 in] Radius

500RGD/500RGS SERIES

Roller Gear Index Drive | Dimensions

500RGD

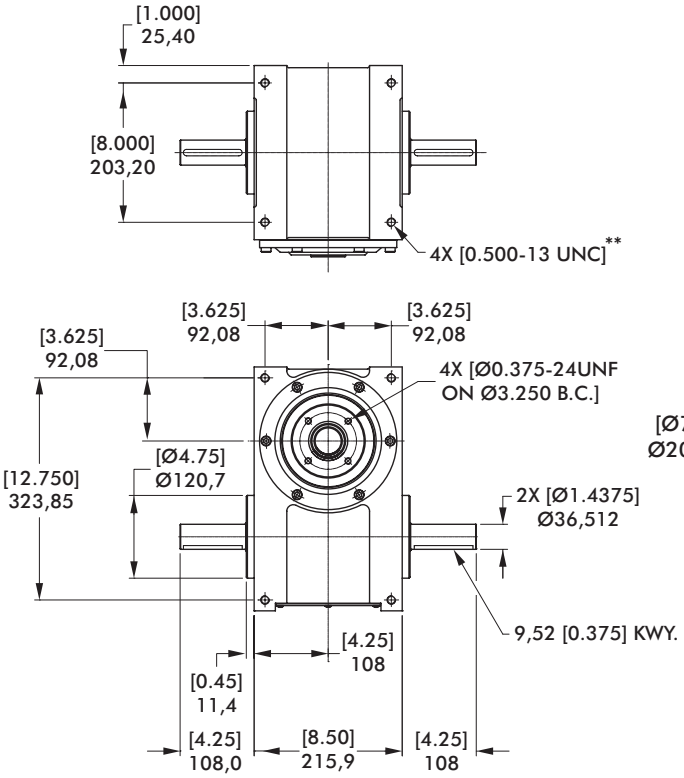

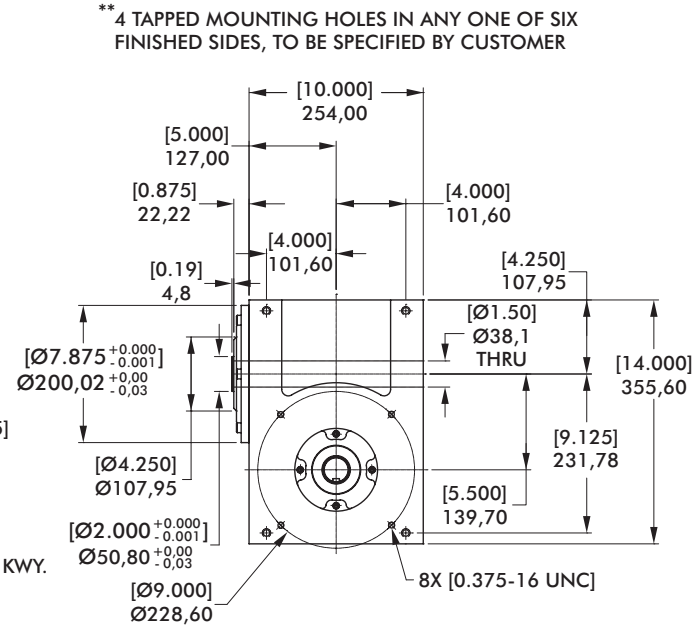

500RGS

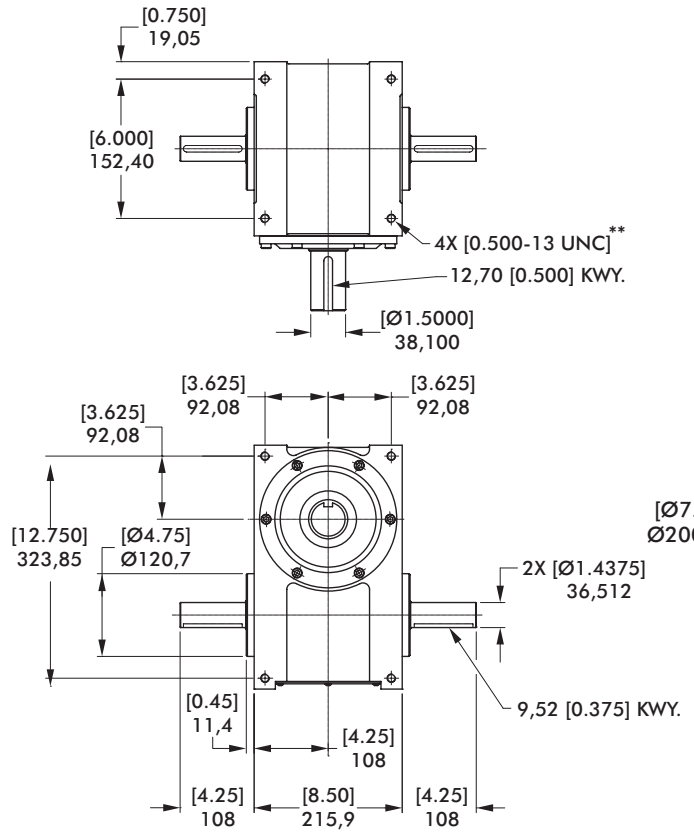

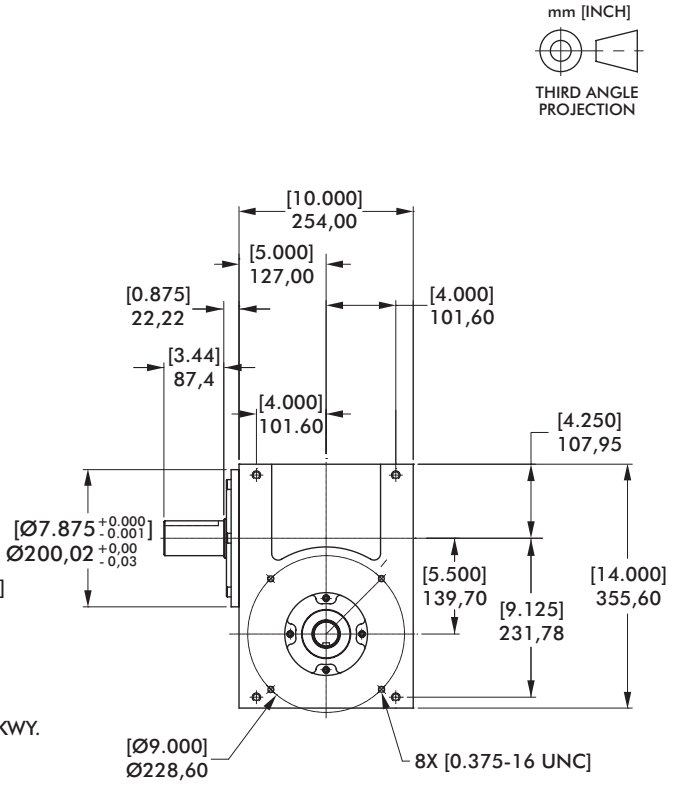

Dimensions and technical information are subject to change without notice

500RGD/500RGS Indexer Capacities						
Stops	Index Period	Motion	B_{10} Capacity at 50 RPM N-m [in-lb]	RGD Internal Inertia kg-cm² [lb-in²]	RGS Internal Inertia kg-cm² [lb-in²]	Model
1	330	msc.60	765 [6767]	181,4 [62]	131,7 [45]	500RG(D/S)1H40-330
2	270	ms	497 [4400]	181,4 [62]	131,7 [45]	500RG(D/S)2H40-270
3	270	ms	595 [5265]	181,4 [62]	131,7 [45]	500RG(D/S)3H40-270
	180	ms	645 [5706]	181,4 [62]	131,7 [45]	500RG(D/S)3H40-180
4	270	ms	692 [6121]	193,1 [66]	140,5 [48]	500RG(D/S)4H40-270
	120	msc.20	440 [3892]	175,6 [60]	122,9 [42]	500RG(D/S)4H32-120
6	270	ms	617 [5464]	181,4 [62]	131,7 [45]	500RG(D/S)6H40-270
	90	ms	781 [6909]	181,4 [62]	131,7 [45]	500RG(D/S)6H40-90
8	270	ms	695 [6151]	193,1 [66]	140,5 [48]	500RG(D/S)8H40-270
	90	ms	929 [8219]	193,1 [66]	140,5 [48]	500RG(D/S)8H40-90
12	270	ms	296 [2616]	169,7 [58]	117,1 [40]	500RG(D/S)12H28-270
	90	ms	390 [3449]	169,7 [58]	117,1 [40]	500RG(D/S)12H28-90

Other Motions (stops and index periods) available. Contact your DESTACO sales representative for more information.

Features

- Universal Mounting: mounting holes on any of 6 sides
- Center Through Hole (Ø38.1 mm [Ø1.50 in]) in RGD model.
- Right Hand Cam Standard

Optional Accessories

- 1 hp AC Drive Package with Inverter Duty Motor and Inverter Drive (up to 60 cpm)
- 1 hp DC Motor with Varipak DC Motor Control (up to 30 cpm)
- Single or Dual Cycle Cam and Limit Switch
- Output Overload Clutch Models: 11S, 11C, 11F, 11C-SD, 11S-SD, 11FC-SD
  - Available Settings (in-lbs): 2300, 4000, 6000, 8500, 11000
- Left Hand Cam
- Relief in Dwell for shot-pin applications
- Left Hand Cam

Output Load Capacity (loads carried during index):

	RGD	RGS
Radial	17811 N [4004 lbs]	16756 N [3767 lbs]
Thrust/Axial	12273 N [2759 lbs]	6374 N [1433 lbs]
Moment	961 N-m [8509 in-lb]	1464 N-m [12959 in-lb]

Accuracy ±29 arcsec / ±0,020 mm [±.0008 in] at 152,4 mm [6 in] Radius

Repeatability ±7 arcsec / ±0,005 mm [±.0002 in] at 152,4 mm [6 in] Radius

600RGD/600RGS SERIES

Roller Gear Index Drive | Dimensions

600RGD

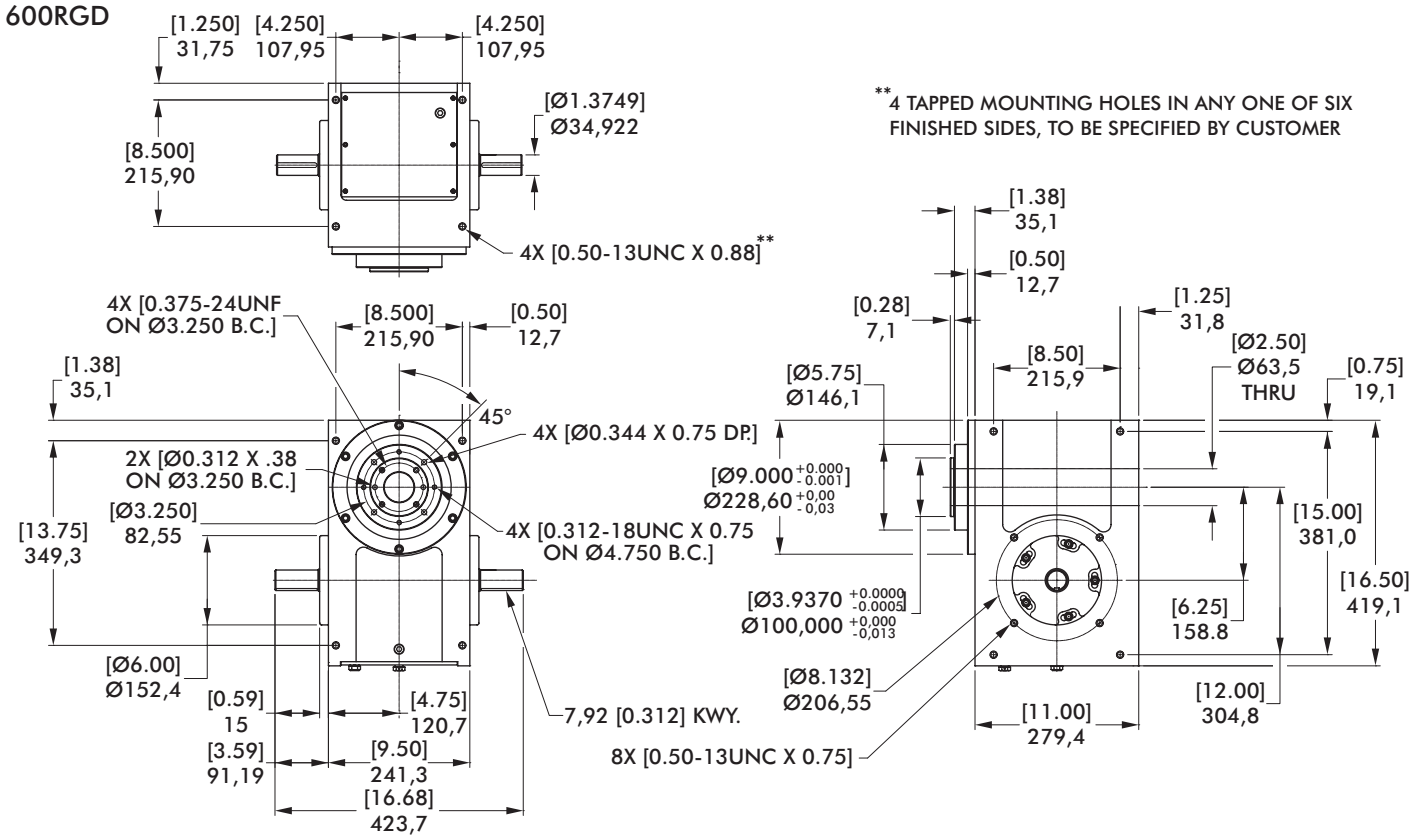

600RGS

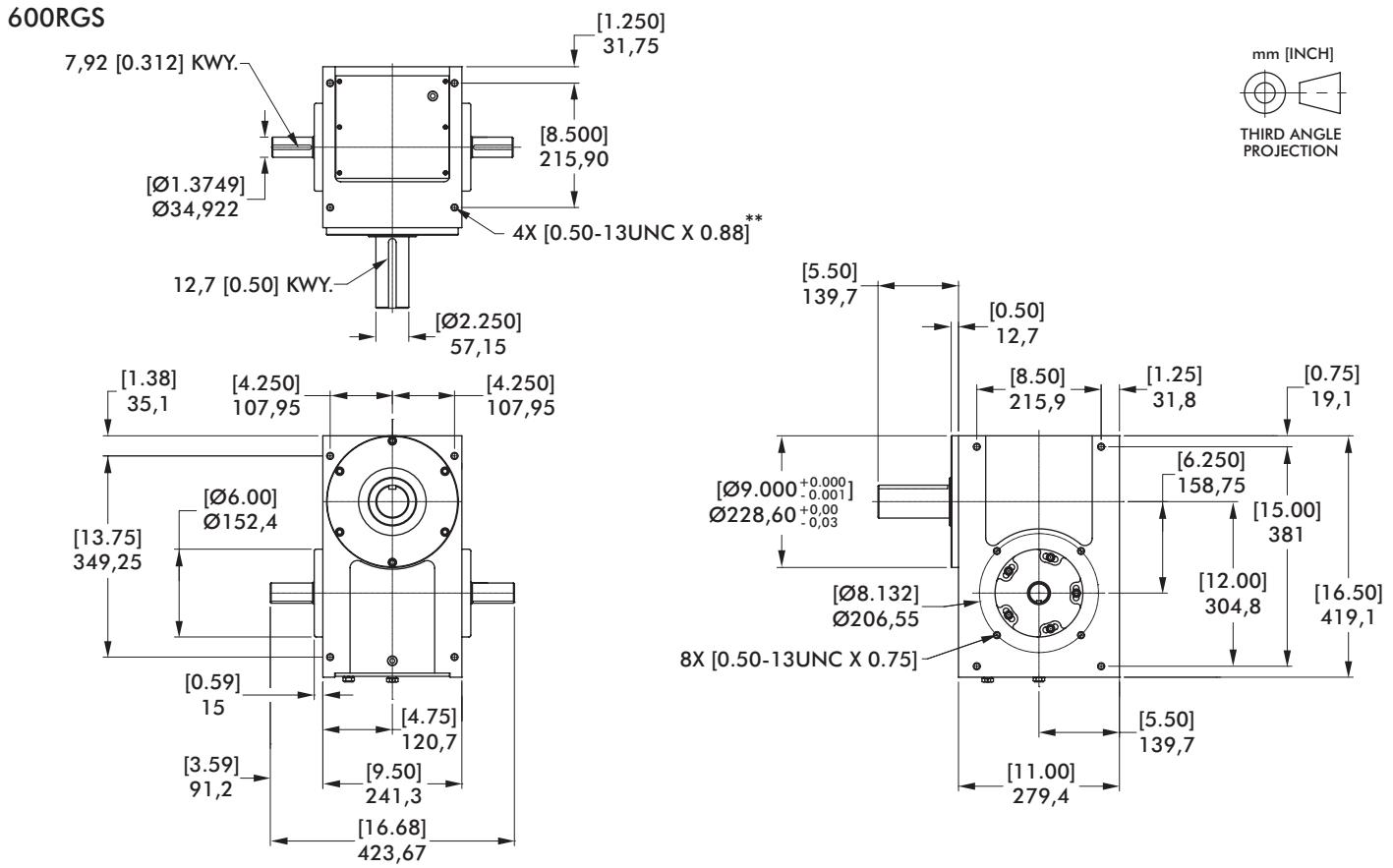

Dimensions and technical information are subject to change without notice

600RGD/600RGS Indexer Capacities						
Stops	Index Period	Motion	B_{10} Capacity at 50 RPM N-m [in-lb]	RGD Internal Inertia kg-cm² [lb-in²]	RGS Internal Inertia kg-cm² [lb-in²]	Model
2	300	ms	736 [6516]	749,2 [256]	400,9 [137]	600RG(D/S)2H48-300
3	270	ms	899 [7955]	749,2 [256]	400,9 [137]	600RG(D/S)3H48-270
	180	ms	991 [8769]	749,2 [256]	400,9 [137]	600RG(D/S)3H48-180
4	270	ms	763 [6749]	728,7 [249]	383,4 [131]	600RG(D/S)4H40-270
	180	ms	845 [7477]	728,7 [249]	383,4 [131]	600RG(D/S)4H40-180
6	270	ms	936 [8286]	749,2 [256]	400,9 [137]	600RG(D/S)6H48-270
	90	ms	1211 [10715]	749,2 [256]	400,9 [137]	600RG(D/S)6H48-90
8	270	ms	783 [6928]	714 [244]	368,7 [126]	600RG(D/S)8H40-270
	90	ms	1010 [8936]	714 [244]	368,7 [126]	600RG(D/S)8H40-90
12	270	ms	462 [4091]	714 [244]	368,7 [126]	600RG(D/S)12H32-270
	90	ms	615 [5444]	714 [244]	368,7 [126]	600RG(D/S)12H32-90
16	270	ms	1079 [9553]	728,7 [249]	383,4 [131]	600RG(D/S)16H40-270 II
	90	ms	1381 [12224]	728,7 [249]	383,4 [131]	600RG(D/S)16H40-90 II

Other Motions (stops and index periods) available. Contact your DESTACO sales representative for more information.

Features

- Universal Mounting: mounting holes on any of 6 sides
- Center Through Hole (Ø63.5 mm [Ø2.50 in]) in RGD model.
- Right Hand Cam Standard

Optional Accessories

- 7300C or 7350C Reducer (Ratios from 5:1 to 60:1)
- 1 or 2 hp AC Drive Package with Inverter Duty Motor and Inverter Drive (up to 60 cpm)
- 1 or 2 hp DC Motor with Varipak DC Motor Control (up to 30 cpm)
- Single or Dual Cycle Cam and Limit Switch
- Output Overload Clutch Models: 11FM, 11SM
  – Available Settings (in-lbs): 2300, 4000, 6000, 8500, 11000
- Left Hand Cam
- Relief in Dwell for shot-pin applications
- Left Hand Cam

Output Load Capacity (loads carried during index):

	RGD	RGS
Radial	25208 N [5667 lbs]	17028 N [3828 lbs]
Thrust/Axial	15693 N [3528 lbs]	15698 N [3529 lbs]
Moment	1841 N-m [16292 in-lb]	2085 N-m [18451 in-lb]

Accuracy ±40 arcsec / ±0,028 mm [±.0011 in] at 152,4 mm [6 in] Radius

Repeatability ±10 arcsec / ±0,008 mm [±.0003 in] at 152,4 mm [6 in] Radius

PRECISION INDEXING SOLUTIONS

Table of Contents

INDEXERS

Servo Positioners

GTB Series
Globoidal (Roller Gear)
Servo Positioner.....IN-SRV-1

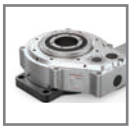

PGM Series
Parallel Gear Servo Positioner...IN-SRV-19

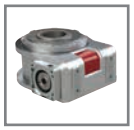

RSD Series
Rotary Servo Drives.....IN-SRV-25

Mechanical Indexers

RDM Series
Rotary Index Drive IN-MCH-1

RD Series
Roller Dial Index Drive..... IN-MCH-42

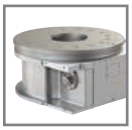

E Series
Heavy-Duty Index Drive IN-MCH-54

RA Series
Right Angle Index Drive IN-MCH-66

RGD/RGS Series
Roller Gear Index Drive IN-MCH-76

P Series
Parallel Shaft/Flange Drive.... IN-MCH-96

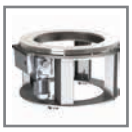

RNG Series
Ring Drive Dial Indexer.. IN-MCH-108

OVERLOAD CLUTCHES

Overload Clutches
Output Overload..... IN-CLU-1

CUSTOM CAMS

Custom Cams
Cam Design Solutions IN-CAM-1

CONVEYORS

Rite-Link Series
Thin-Profile..... IN-CNV-1

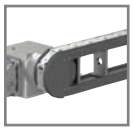

Precision Link Series
Table-Top IN-CNV-4

Precision Link Series
Heavy-Duty IN-CNV-16

PARTS HANDLERS

LPP Series
Linear Part Handlers IN-PRT-2

RPP Series
Rotary Part Handlers IN-PRT-8

Dimensions and technical information are subject to change without notice

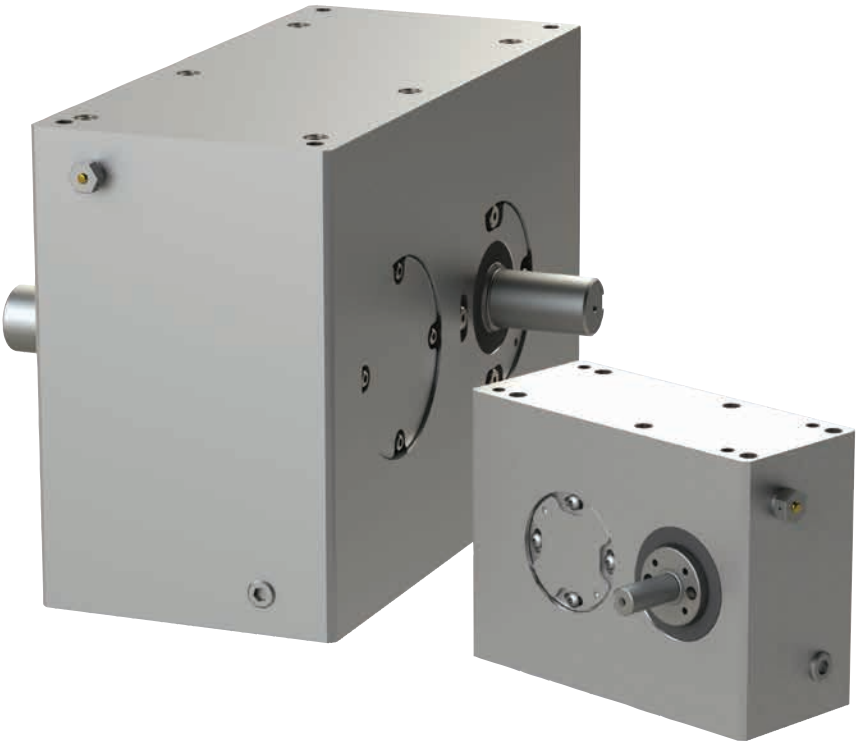

Features:

Camco Parallel Index Drives are ideal for high-speed applications or for actuation-type applications such as driving a linkage or a conveyor.

Hardened and ground conjugate cams

Yoke-mounted, preloaded cam followers are non-reversing for high capacity and speed capability

Whole or fractional stops, oscillating and complex custom motions are available

Long transfer distances achieved with simple linkages

Preloaded, tapered roller bearings for rigidity and backlash-free operation

Table of Contents

How to Order 97

250P..... 99

387P..... 101

512P..... 103

662P..... 105

P SERIES

Parallel Shaft/Flange Drives | How To Order

Indexer Ordering Procedure

1. Input Assembly: Right, Left or Double (DE)
2. Output Assembly: Right, Left or Double (DE).
   - Flanged output is primary output. For Double Output, specify whether flanged output is on right or left side.

NOTE: Input may rotate in either direction to achieve desired direction of output rotation.

3. Mounting Position: 1-6

Reducer Ordering Procedure

1. Model
2. Ratio: 5:1, 10:1, 15:1, 20:1, 25:1, 30:1, 40:1, 50:1, 60:1
3. Motor Adapter
4. Reducer Input Shaft Extension: Single Input (SE) or Double Input (DE)
5. Mounting (see diagram below)

Position of Shafts (Top View)

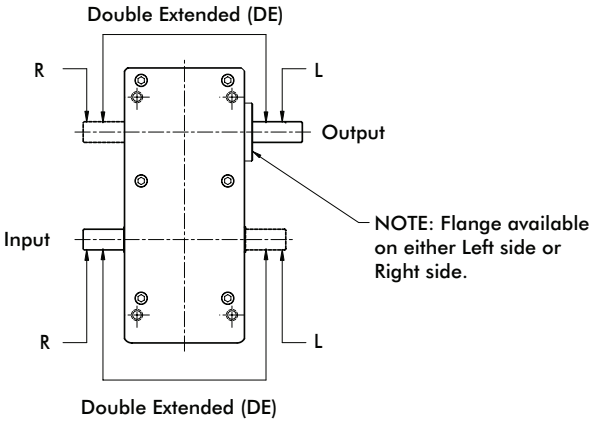

Input/Output Shaft Rotation

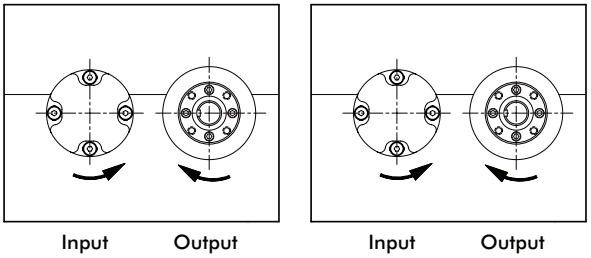

Dimensions and technical information are subject to change without notice

Parallel Shaft/Flange Drives | Indexer Mounting Position

OHEI (output horizontal, even with input)	OHEI (output horizontal, even with input)	OHOI (output horizontal, over input)	OHUI (output horizontal, under input)	VD (output vertical down)	VU (output vertical up)
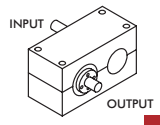 1	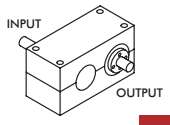 2	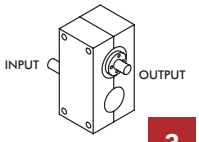 3	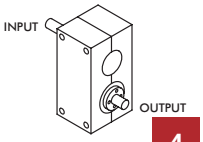 4	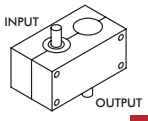 5	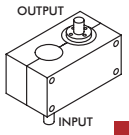 6

Gear Reducer Mounting Positions (Figure 4)

	Mounting "A"		Mounting "B"	
	RH	LH	RH	LH
SIDE R	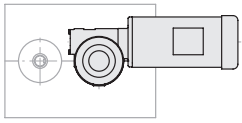 A	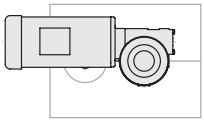 B	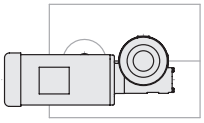 C	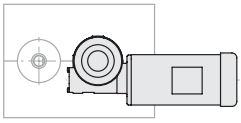 D
SIDE L	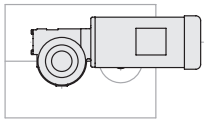 E	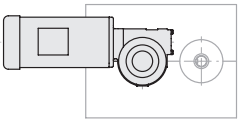 F	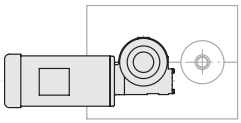 G	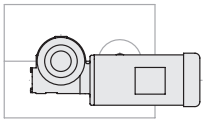 H

	Mounting "C"		Mounting "D"	
	RH	LH	RH	LH
SIDE R	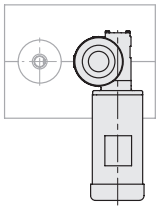 J	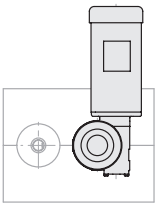 K	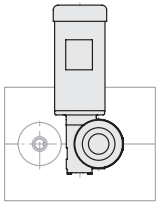 L	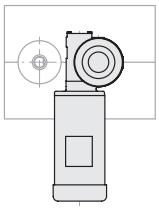 M
SIDE L	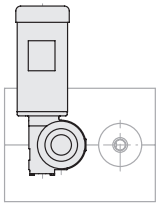 N	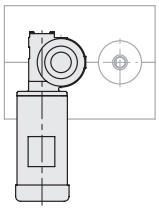 P	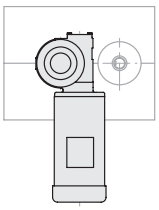 R	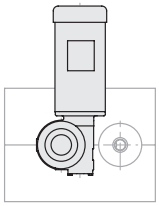 S

250P SERIES

Parallel Shaft/Flange Drives | Dimensions

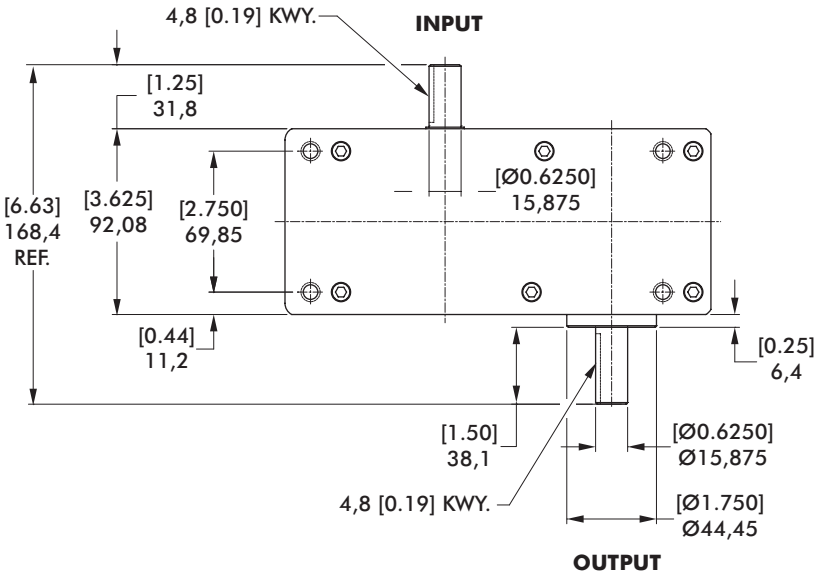

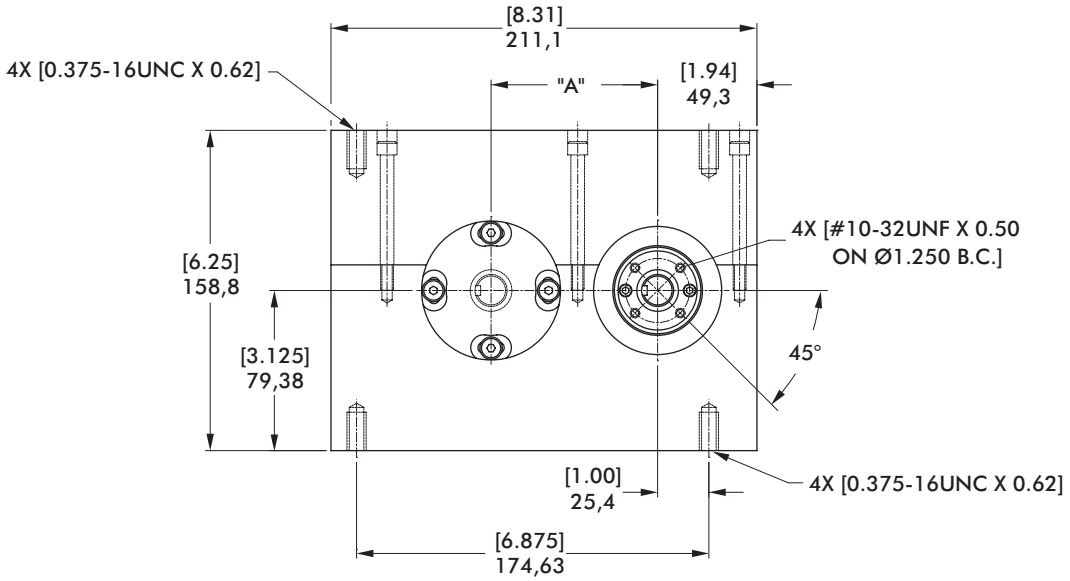

mm [INCH]

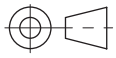

THIRD ANGLE
PROJECTION

Dimensions and technical information are subject to change without notice

250P Indexer Capacities						
Stops	Index Period	Motion	B_{10} Capacity at 50 RPM N-m [in-lb]	Internal Inertia kg-cm² [lb-in²]	Model	"A" Center mm [in]
1	300	msc.50	50 [444]	8,8 [3]	250P1H20-300	82,6 [3.25]
1.5	270	msc.33	54 [481]	5,9 [2]	250P1.5H20-270	82,6 [3.25]
2	270	ms	49 [433]	8,8 [3]	250P2H20-270	82,6 [3.25]
	180	msc.33	62 [546]	8,8 [3]	250P2H20-180	82,6 [3.25]
3	270	ms	66 [582]	5,9 [2]	250P3H20-270	69,9 [2.75]
	120	ms	74 [653]	5,9 [2]	250P3H20-120	82,6 [3.25]
4	270	ms	65 [571]	8,8 [3]	250P4H20-270	69,9 [2.75]
	90	msc.25	88 [782]	8,8 [3]	250P4H20-90	82,6 [3.25]
6	270	ms	100 [888]	5,9 [2]	250P6H20-270 II	69,9 [2.75]
	180	msc.33	235 [2078]	8,8 [3]	250P6H24-180 II	69,9 [2.75]
8	270	ms	95 [843]	8,8 [3]	250P8H20-270 II	69,9 [2.75]
	120	ms	112 [993]	8,8 [3]	250P8H20-120 II	82,6 [3.25]

Other Motions (stops and index periods) available. Contact your DESTACO sales representative for more information.

Features

- Single Input Shaft and Single Output Shaft
- Output horizontal even with input Mounting
- R180 Reducer (ratios from 15:1 to 60:1)
  - Double Extended Worm (input) Shaft
  - Worm Shaft Handwheel
- 1/3 or 1 HP AC Drive Package with Inverter Duty Motor and Inverter Drive (up to 60 cpm)
- Single Cycle Cam and Limit Switch

Optional Accessories

- 1/3 hp DC motor
- Varipak DC Motor Control (up to 30 cpm)
- R225 Reducer (ratios from 10:1 to 60:1)
  - 1 hp AC or DC drive package
  - 56C Motor Adapter and Coupling
- Output Overload Clutch Models: .39F, .39FC, .39S and .39C, .39C-SD, .39FC-SD, .39S-SD
  - Available Settings (in-lb): 160, 210, 270, 320, 390
- Dual Cycle Cam and Limit Switch
- Oscillating motion
- Double Input Shaft
- Double Output Shaft
- Output and Input Vertical Mounting

Output Load Capacity (loads carried during index):

Radial	1406 N [316 lbs]
Thrust/Axial	1397 N [314 lbs]
Moment	45 N-m [395 in-lb]

Accuracy ±77 arcsec / ±0,028 mm [±.0011 in] at 76,2 mm [3 in] Radius

Repeatability ±19 arcsec / ±0,008 mm [±.0003 in] at 76,2 mm [3 in] Radius

387P SERIES

Parallel Shaft/Flange Drives | Dimensions

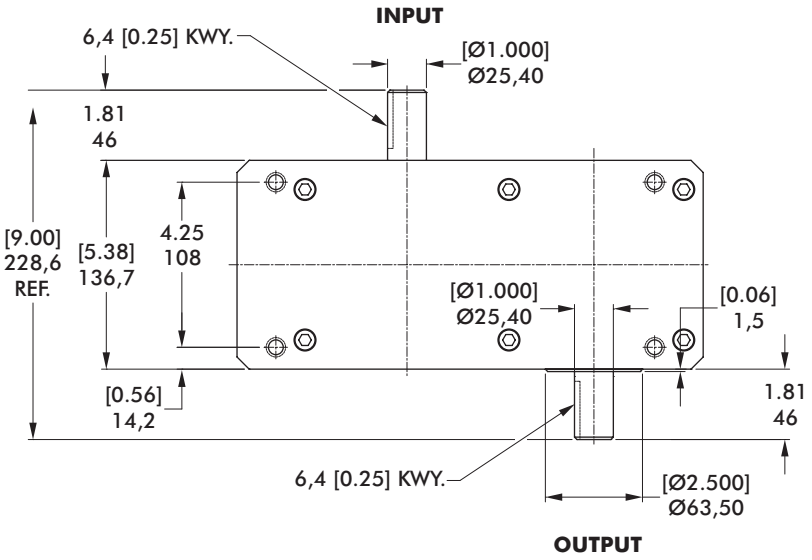

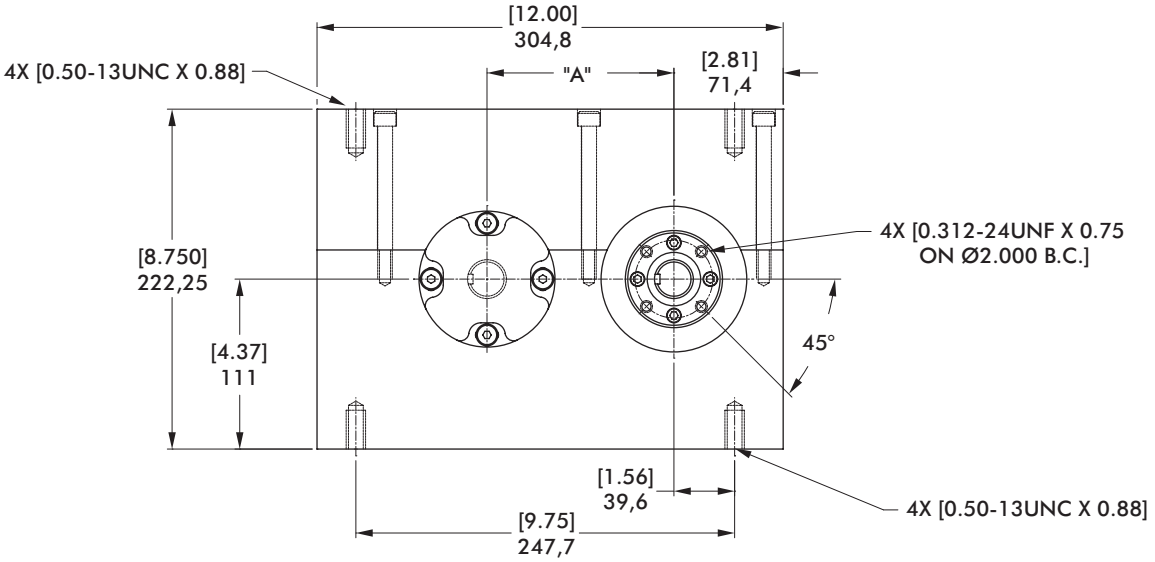

mm [INCH]

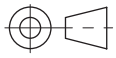

THIRD ANGLE
PROJECTION

387P Indexer Capacities						
Stops	Index Period	Motion	B_{10} Capacity at 50 RPM N-m [in-lb]	Internal Inertia kg-cm² [lb-in²]	Model	"A" Center mm [in]
1	300	msc.66	156 [1385]	41,0 [14]	387P1H28-300	122,22 [4.812]
1.33	315	msc.10	120 [1062]	38,0 [13]	387P1.33H28-315	122,22 [4.812]
1.5	300	ms	124 [1099]	38,0 [13]	387P1.5H28-300	122,22 [4.812]
2	270	msc.33	202 [1788]	41,0 [14]	387P2H32-270	122,22 [4.812]
	180	msc.33	237 [2095]	41,0 [14]	387P2H32-180	122,22 [4.812]
2.67	270	msc.33	245 [2171]	41,0 [14]	387P2.67H28-270 II	122,22 [4.812]
3	270	ms	181 [1601]	38,0 [13]	387P3H28-270	101,60 [4.000]
	120	msc.33	234 [2067]	41,0 [14]	387P3H28-120	122,22 [4.812]
4	270	ms	181 [1605]	41,0 [14]	387P4H28-270	101,60 [4.000]
	90	msc.33	250 [2214]	41,0 [14]	387P4H28-90	122,22 [4.812]
6	270	ms	276 [2445]	38,0 [13]	387P6H28-270 II	101,60 [4.000]
	180	ms	278 [2463]	38,0 [13]	387P6H28-180 II	122,22 [4.812]
8	270	ms	269 [2378]	41,0 [14]	387P8H28-270 II	101,60 [4.000]

Other Motions (stops and index periods) available. Contact your DESTACO sales representative for more information.

Features

- Single Input Shaft and Single Output Shaft
- Output horizontal even with input Mounting
- R225 Reducer (ratios from 10:1 to 60:1)
  – 56C Motor Adapter and Coupling
- 1 HP AC Drive Package with Inverter Duty Motor and Inverter Drive (up to 60 cpm)
- Single Cycle Cam and Limit Switch

Optional Accessories

- 1 hp DC motor
- Varipak DC Motor Control (up to 30 cpm)
- R260 Reducer (ratios from 5:1 to 60:1)
  – 1 hp AC or DC drive package
  – 56C Motor Adapter and Coupling
- Output Overload Clutch Models: 2.3F, 2.3FC, 2.3S and 2.3C, 2.3C-SD, 2.3FC-SD, 2.3S-SD
  – Available Settings (in-lb): 400, 600, 700, 850, 1000, 1300, 1800, 2000, 2300
- Dual Cycle Cam and Limit Switch
- Oscillating motion
- Double Input Shaft
- Double Output Shaft
- Output and Input Vertical Mounting

Output Load Capacity (loads carried during index):

Radial	3981 N [895 lbs]
Thrust/Axial	2567 N [577 lbs]
Moment	183 N-m [1620 in-lb]

Accuracy ±50 arcsec / ±0,018 mm [±.0007 in] at 76,2 mm [3 in] Radius

Repeatability ±12 arcsec / ±0,005 mm [±.0002 in] at 76,2 mm [3 in] Radius

512P SERIES

Parallel Shaft/Flange Drives | Dimensions

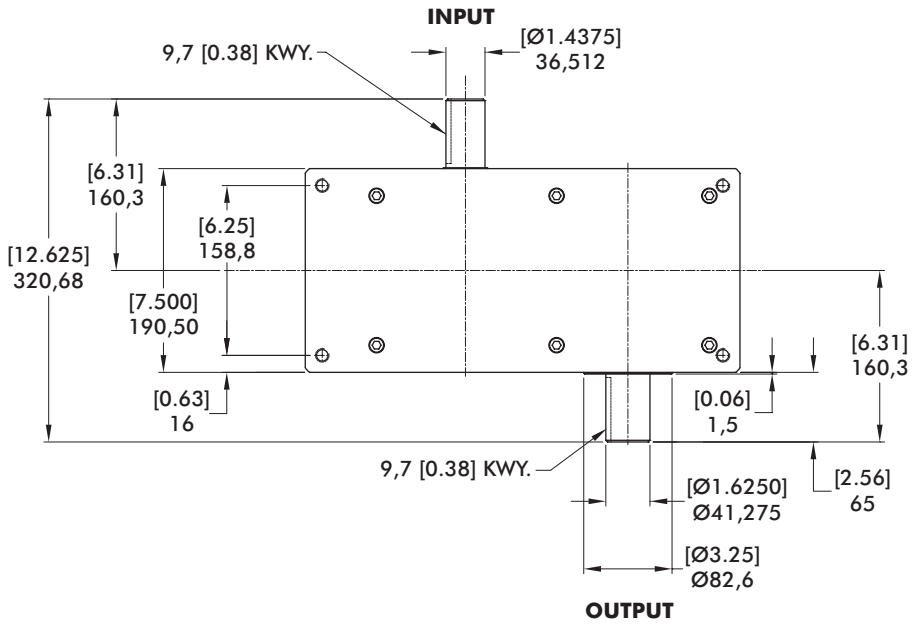

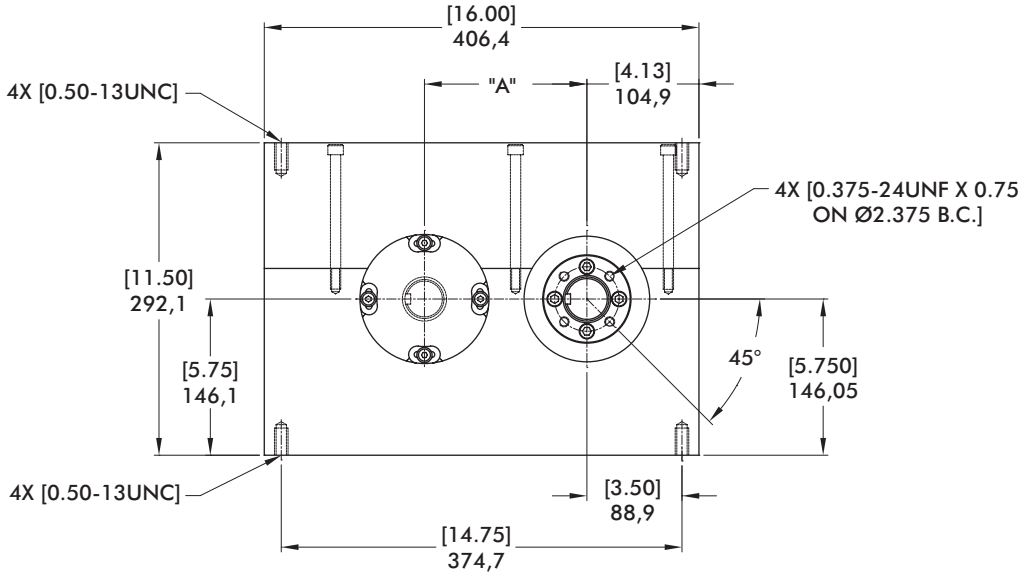

mm [INCH]

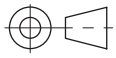

THIRD ANGLE
PROJECTION

512P Indexer Capacities						
Stops	Index Period	Motion	B_{10} Capacity at 50 RPM N-m [in-lb]	Internal Inertia kg-cm² [lb-in²]	Model	"A" Center mm [in]
1	330	msc.75	728 [6441]	184,4 [63]	512P1H48-330	151,87 [5.979]
1.33	330	msc.33	557 [4928]	178,5 [61]	512P1.33H48-330	151,87 [5.979]
1.5	330	ms	549 [4860]	184,4 [63]	512P1.5H48-330	151,87 [5.979]
	270	msc.33	494 [4373]	178,5 [61]	512P2H40-270	151,87 [5.979]
2	180	msc.50	612 [5416]	178,5 [61]	512P2H40-180	151,87 [5.979]
	120	msc.50	467 [4131]	178,5 [61]	512P2H40-120	151,87 [5.979]
3	300	msc.33	804 [7116]	178,5 [61]	512P2.67H40-300 II	151,87 [5.979]
	180	ms	617 [5462]	163,9 [56]	512P3H40-180	151,87 [5.979]
4	270	ms	635 [5619]	178,5 [61]	512P4H40-270	123,39 [4.858]
	120	ms	706 [6252]	178,5 [61]	512P4H40-120	151,87 [5.979]
6	270	ms	939 [8315]	163,9 [56]	512P6H40-270 II	123,39 [4.858]
	180	ms	933 [8261]	163,9 [56]	512P6H40-180 II	151,87 [5.979]
8	270	ms	948 [8387]	178,5 [61]	512P8H40-270 II	123,39 [4.858]
	180	ms	892 [7894]	178,5 [61]	512P8H40-180 II	151,87 [5.979]

Other Motions (stops and index periods) available. Contact your DESTACO sales representative for more information.

Features

- Single Input Shaft and Single Output Shaft
- Output horizontal even with input Mounting
- R225 Reducer (ratios from 10:1 to 60:1)
  – 56C Motor Adapter and Coupling
- 1 HP AC Drive Package with Inverter Duty Motor and Inverter Drive (up to 60 cpm)
- Single Cycle Cam and Limit Switch

Output Load Capacity (loads carried during index):

Radial	12077 N [2715 lbs]
Thrust/Axial	6112 N [1374 lbs]
Moment	785 N-m [6951 in-lb]
Accuracy	±37 arcsec / ±0,013 mm [±.0005 in] at 76,2 mm [3 in] Radius
Repeatability	±9 arcsec / ±0,003 mm [±.0001 in] at 76,2 mm [3 in] Radius

Optional Accessories

- 1 hp DC motor
- Varipak DC Motor Control (up to 30 cpm)
- R260 Reducer (ratios from 5:1 to 60:1)
  – 1 hp AC or DC drive package
  – 56C Motor Adapter and Coupling
- Output Overload Clutch Models: 6.0F, 6.0FC, 6.0S and 6.0C, 6.0C-SD, 6.0FC-SD, 6.0S-SD
  – Available Settings (in-lb): 670, 825, 1100, 1400,1700, 2000, 2300, 2500, 3000, 3800, 4000, 5000, 6000
- Dual Cycle Cam and Limit Switch
- Oscillating motion
- Double Input Shaft
- Double Output Shaft
- Output and Input Vertical Mounting

662P SERIES

Parallel Shaft/Flange Drives | Dimensions

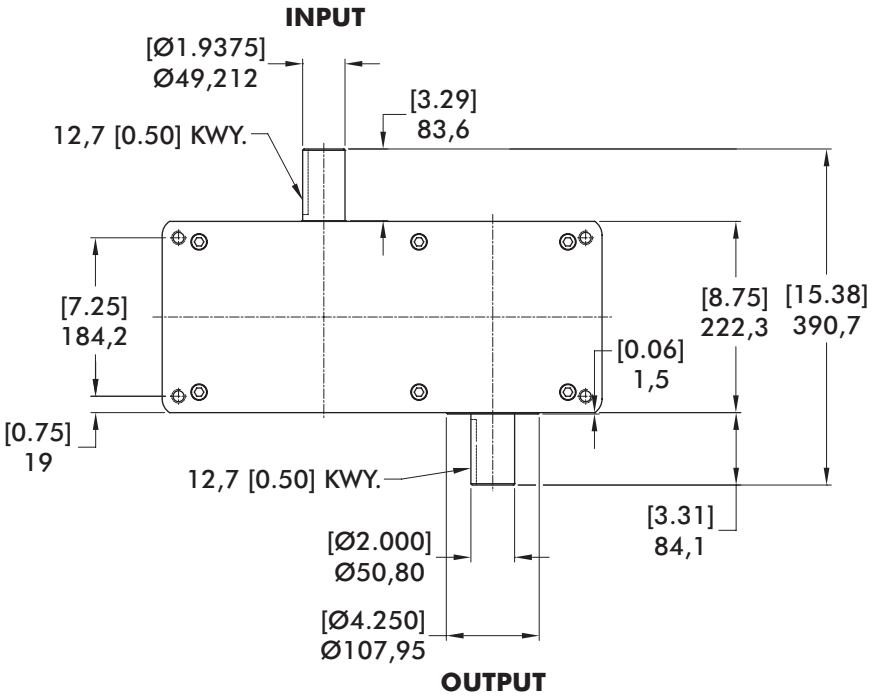

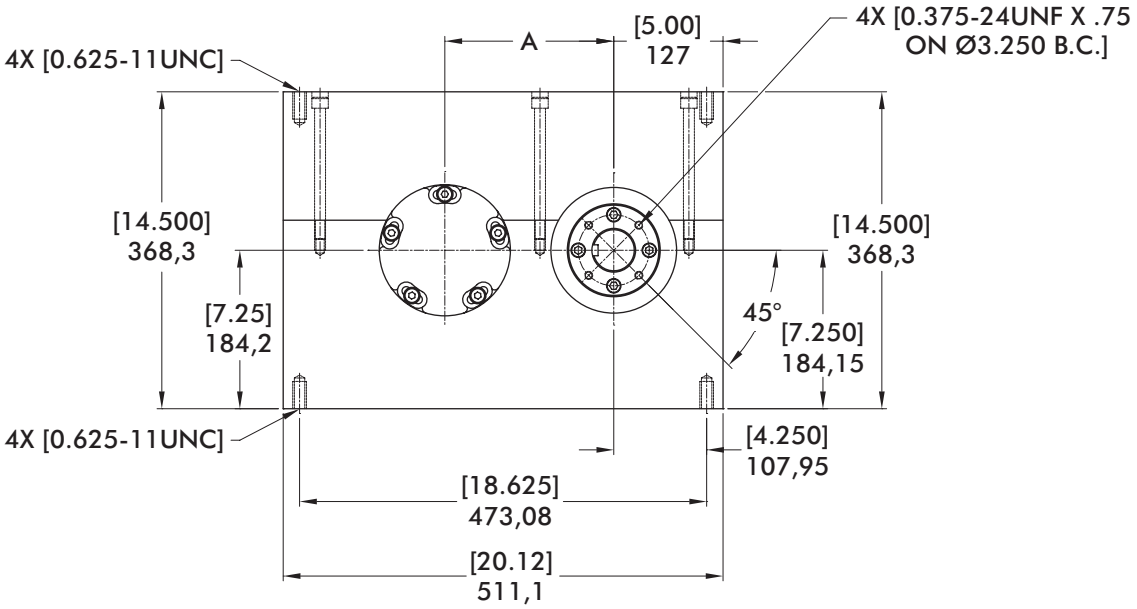

mm [INCH]

THIRD ANGLE PROJECTION

Dimensions and technical information are subject to change without notice

662P Indexer Capacities						
Stops	Index Period	Motion	B_{10} Capacity at 50 RPM N-m [in-lb]	Internal Inertia kg-cm² [lb-in²]	Model	"A" Center mm [in]
1	330	msc.50	658 [5824]	403,8 [138]	662P1H48-330	196,32 [7.729]
1.33	330	msc.20	1171 [10368]	971,6 [332]	662P1.33H64-330	196,32 [7.729]
1.5	270	msc.33	1425 [12617]	895,5 [306]	662P1.5H64-270	196,32 [7.729]
2	270	msc.33	770 [6811]	529,7 [181]	662P2H48-270	196,32 [7.729]
	180	msc.50	1329 [11760]	597,0 [204]	662P2H56-180	196,32 [7.729]
3	270	ms	954 [8446]	485,8 [166]	662P3H48-270	168,35 [6.628]
	180	ms	961 [8506]	485,8 [166	662P3H48-180	196,32 [7.729]
4	270	ms	989 [8752]	529,7 [181]	662P4H48-270	168,35 [6.628]
	120	ms	1100 [9738]	529,7 [181]	662P4H48-120	196,32 [7.729]
6	270	ms	1463 [12946]	485,8 [166]	662P6H48-270 II	168,35 [6.628]
	180	ms	1453 [12863]	485,8 [166]	662P6H48-180 II	196,32 [7.729]
8	270	ms	1476 [13060]	529,7 [181]	662P8H48-270 II	168,35 [6.628]
	120	msc.33	1783 [15780]	529,7 [181]	662P8H48-120	196,32 [7.729]

Other Motions (stops and index periods) available. Contact your DESTACO sales representative for more information.

Features

- Single Input Shaft and Single Output Shaft
- Output horizontal even with input Mounting
- R225 Reducer (ratios from 10:1 to 60:1)
  – 56C Motor Adapter and Coupling
- 1 HP AC Drive Package with Inverter Duty Motor and Inverter Drive (up to 60 cpm)
- Single Cycle Cam and Limit Switch

Optional Accessories

- 7350C or 7400C Reducer (ratios from 5:1 to 60:1) with Motor Adapter and Coupling
- 1 hp DC Motor
- Output Overload Clutch Models: 11F, 11FC, 11FC-SD
  – Available Settings (in-lb): 2300, 4000, 6000, 8500, 11000
- Dual Cycle Cam and Limit Switch
- Electric Clutch-Brake
- Air Clutch-Brake
- Oscillating motion
- Double Input Shaft
- Double Output Shaft
- Output and Input Vertical Mounting

Output Load Capacity (loads carried during index):

Radial	17415 N [3915 lbs]
Thrust/Axial	9083 N [2042 lbs]
Moment	1464 N-m [12959 in-lb]

Accuracy ±36 arcsec / ±0,025 mm [±.001 in] at 76,2 mm [3 in] Radius

Repeatability ±9 arcsec / ±0,008 mm [±.0003 in] at 152,4 mm [6 in] Radius

PRECISION INDEXING SOLUTIONS

Table of Contents

INDEXERS

Servo Positioners

GTB Series
Globoidal (Roller Gear)
Servo Positioner.....IN-SRV-1

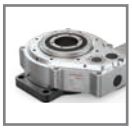

PGM Series
Parallel Gear Servo Positioner...IN-SRV-19

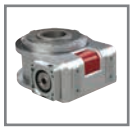

RSD Series
Rotary Servo Drives.....IN-SRV-25

Mechanical Indexers

RDM Series
Rotary Index Drive IN-MCH-1

RD Series
Roller Dial Index Drive..... IN-MCH-42

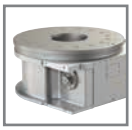

E Series
Heavy-Duty Index Drive IN-MCH-54

RA Series
Right Angle Index Drive IN-MCH-66

RGD/RGS Series
Roller Gear Index Drive IN-MCH-76

P Series
Parallel Shaft/Flange Drive.... IN-MCH-96

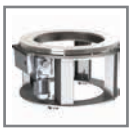

RNG Series
Ring Drive Dial Indexer.. IN-MCH-108

OVERLOAD CLUTCHES

Overload Clutches
Output Overload..... IN-CLU-1

CUSTOM CAMS

Custom Cams
Cam Design Solutions IN-CAM-1

CONVEYORS

Rite-Link Series
Thin-Profile..... IN-CNV-1

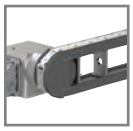

Precision Link Series
Table-Top IN-CNV-4

Precision Link Series
Heavy-Duty IN-CNV-16

PARTS HANDLERS

LPP Series
Linear Part Handlers IN-PRT-2

RPP Series
Rotary Part Handlers IN-PRT-8

Dimensions and technical information are subject to change without notice

RING DRIVE DIAL INDEXER

Features | How To Order

Shown with optional base

Work from Within

The CAMCO Ring Drive offers easy-to-integrate automation that fits easily into your operations.

Minimize machine footprint: Mount your equipment inside the through-hole of the CAMCO Ring Drive.

Easily tool the ring drive: Attach fixtures directly to the dial ring,eliminating the need for an additional dial plate.

Best technical support and service: Worldwide access to our global network.

Applications

Printing and decorating machines

Rotary automatic assembly machines

Ideal for assembly systems requiring a large number of tooling stations

The Ring Drive can replace a small conveyor

Table of Contents

How to Order 109

750RNG 111

1100RNG 113

1550RNG 115

Licensed under U.S. Patent No. 5,950,503

RNG SERIES

Ring Drive Dial Indexer | Features and Benefits | How to Order

Base Model	Description
750RNG	w/ KH37 reducer & 1 HP AC motor (220/440V)
1100RNG	w/ KH37 reducer & 1 HP AC motor (220/440V)
1550RNG	w/ KH37 reducer & 1-1/2 HP AC motor (220/440V)

Control	Description
1	1 HP 120V 750RNG & 1100RNG only
2	1 HP 240V 750RNG & 1100RNG only
3	1 HP 440V 750RNG & 1100RNG only
4	2 HP 240V 1550RNG only
5	2 HP 440V 1550RNG only

Motion	Stops	Index
A	6	330
B	8	330
C	12	330
D	16	330

Index Mounting
(See Figure 1)

1

Reducer Ratio

	750RNG	1100RNG	1550RNG
A	15.31	29.96	39.61
B	20.91	37.97	49.95
C	24.99	49.79	63.30
D	29.96	58.60	69.84
E	37.97	67.80	75.20
F	49.79	72.54	85.12
G	58.60	83.69	90.86

Reducer Mounting
(See Figure 3)

A
B

Signal Switch

M Mechanical
P Proximity

Example: MS or PS

Note about signal switch options:
a) Mechanical is a single switch with cam.
b) Proximity option is a mounting bracket for 8 or 12 mm proximity switch. A proximity switch will not be supplied. Cam supplied as target.

Signal Switch Side
(See Figure 2)

S Shaft

Other Motions (stops and index periods) available. Contact your DESTACO sales representative for more information.

Ring Drive Features

Great Design Flexibility

Available in three sizes (Ø): .75 m [29.53 in], 1.1 m [43.31 in] and 1.6 m [62.99 in]

Complete motorized drive package with reducer and AC inverter drive to suit most applications

Dial Ring can be removed for machining to mounting your tooling and fixtures.

Large center through-hole to accommodate auxiliary equipment

60 station capability, ideal for multiple part automatic assembly machines

Steel Dial Ring or optional Aluminum Ring

Broad range of motions/drive packages

Robust And Reliable

Superior accuracy, similar to a precision link conveyor - your work station is located over the cam for maximum accuracy.

High precision, hardened cams available in standard and special motions

Sealed 4-point contact output bearing and large cam followers for superior accuracy and load capability (models 750RNG, 1100RNG and 1550RNG)

Modular shaft-mounted reducers for application flexibility and easy maintenance

Access to cam followers for easy inspection and replacement

Tapered roller bearings on camshaft

Dimensions and technical information are subject to change without notice

Input Shaft Configuration/Rotations (Figure 1)

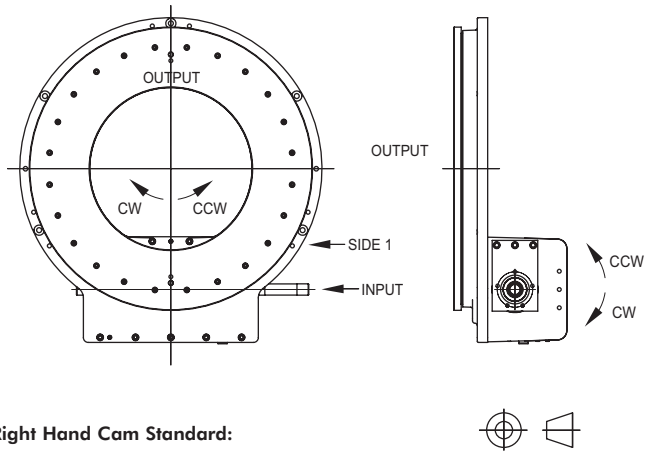

Right Hand Cam Standard:

CW Input Side 1, CCW Output
CCW Input Side 1, CW Output

NOTE: Input can be driven in either direction

Signal Switch Mounting Position (Figure 2)

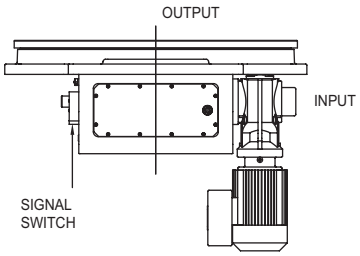

Gear Reducer Mounting Positions (Figure 3)

MOUNTING "A"

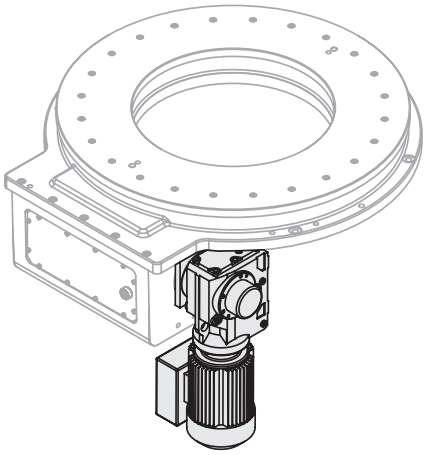

MOUNTING "B"

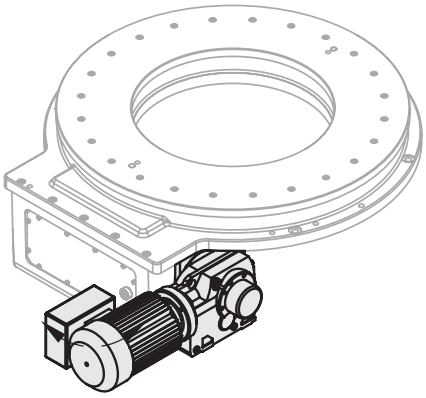

750RNG SERIES

Ring Drive Dial Indexer | Dimensions

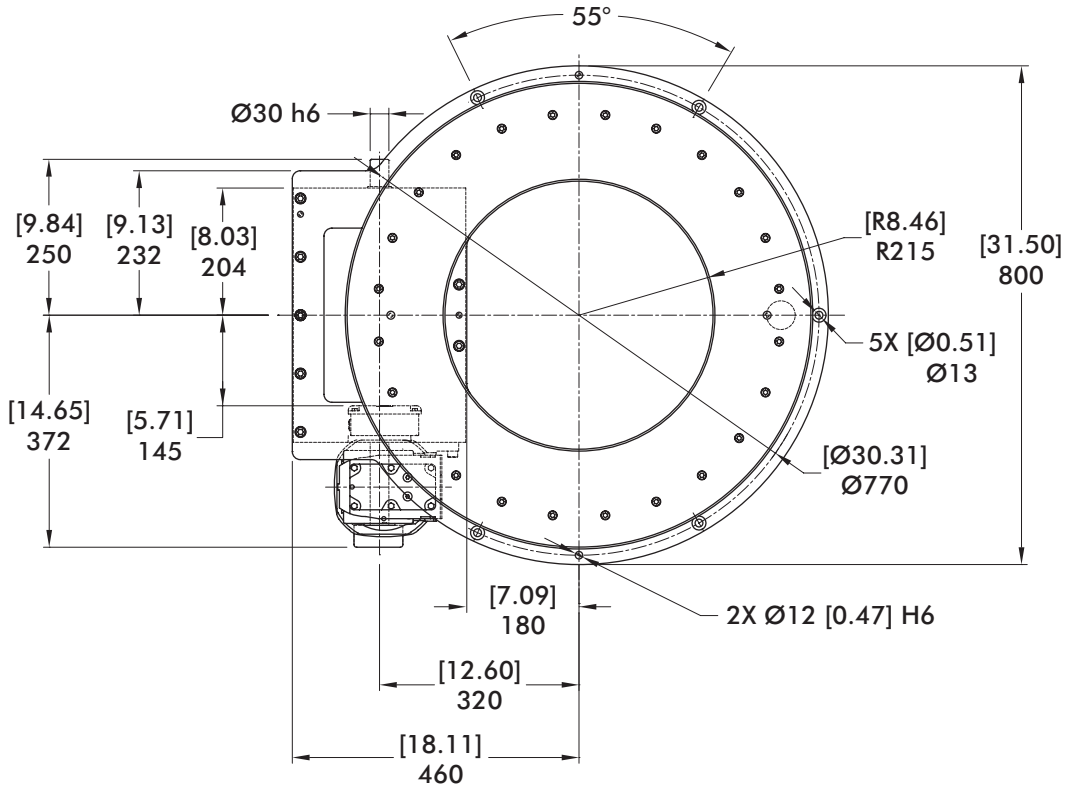

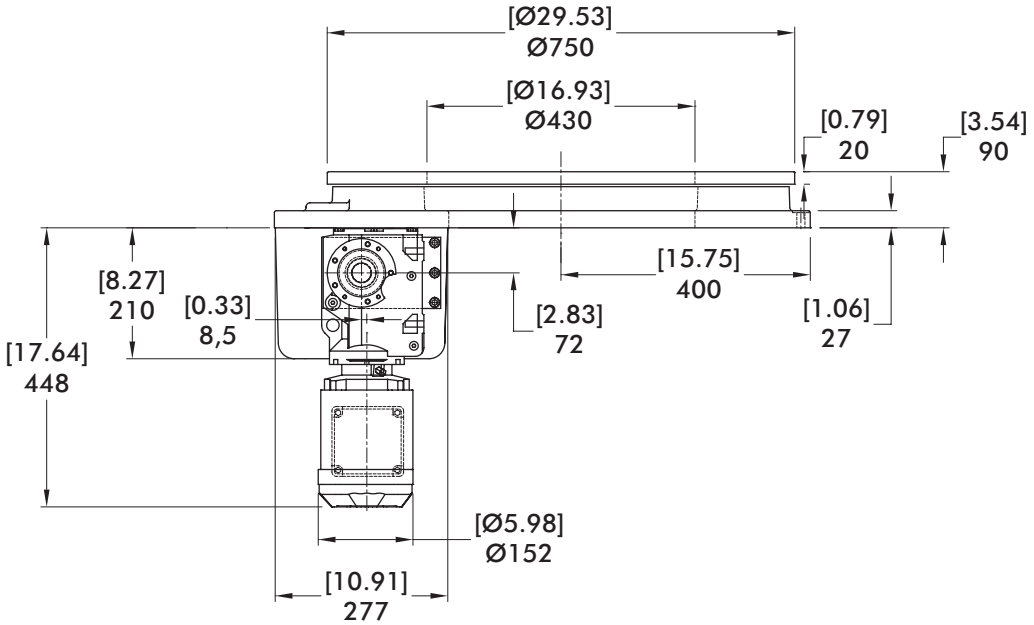

mm [INCH]

THIRD ANGLE PROJECTION

Dimensions and technical information are subject to change without notice

Maximum Inertia x 1000 kg-cm² [lb-in²] for standard package							
Stops	Motion Time [seconds]						
	0.468	0.617	0.764	0.915	1.160	1.521	1.791
6	0 [0]	50 [17]	170 [58]	363 [124]	855 [292]	1653 [565]	2315 [791]
8	9 [3]	138 [47]	354 [121]	696 [238]	1571 [537]	2991 [1022]	4167 [1424]
12	105 [36]	392 [134]	878 [300]	1650 [564]	3620 [1237]	6813 [2328]	9461 [3233]
16	237 [81]	746 [255]	1610 [550]	2982 [1019]	6488 [2217]	12162 [4156]	16871 [5765]
Reducer Ratio							
	15.31	20.19	24.99	29.96	37.97	49.79	58.60

Features

- KH37 Reducer (Ratios from 15.31:1 to 58.6:1)
- 1 HP AC Drive Package with Inverter Duty Motor and IM-pAC AC Drive (up to 60 cpm)
- Double Extended Camshaft (Input Shaft)
- Center Thru Hole (Ø230 mm [Ø9.05 in])
- Cycle Cam and Limit Switch Mounted to Camshaft
- Right Hand Cam

Optional Accessories

- KH47 Reducer
- 2 HP AC Drive Package with Inverter Duty Motor and Commander SK AC Drive (up to 60 cpm)
- Dual Cam and Limit Switch
- Left Hand Cam
- AC brake Motor
- Aluminum dial ring
- Servo motor drive package with precision planetary reducer for applications requiring flexibility or fewer than 6 stations
- Custom dials & tooling plates
- Machined base (see pg. IN-MCH-84)

Output Bearing Capacity (loads carried during index):

Radial	25740 N [5580 lbs]
Axial	64020 N [14550 lbs]
Moment	6915 N-m [61200 in-lbs]

Accuracy ±60 arcsec / ±0,047 mm [±.0019 in] at 324 mm [12.75 in] Radius

Repeatability ±15 arcsec / ±0,012 mm [±.0005 in] at 324 mm [12.75 in] Radius

1100RNG SERIES

Ring Drive Dial Indexer | Dimensions

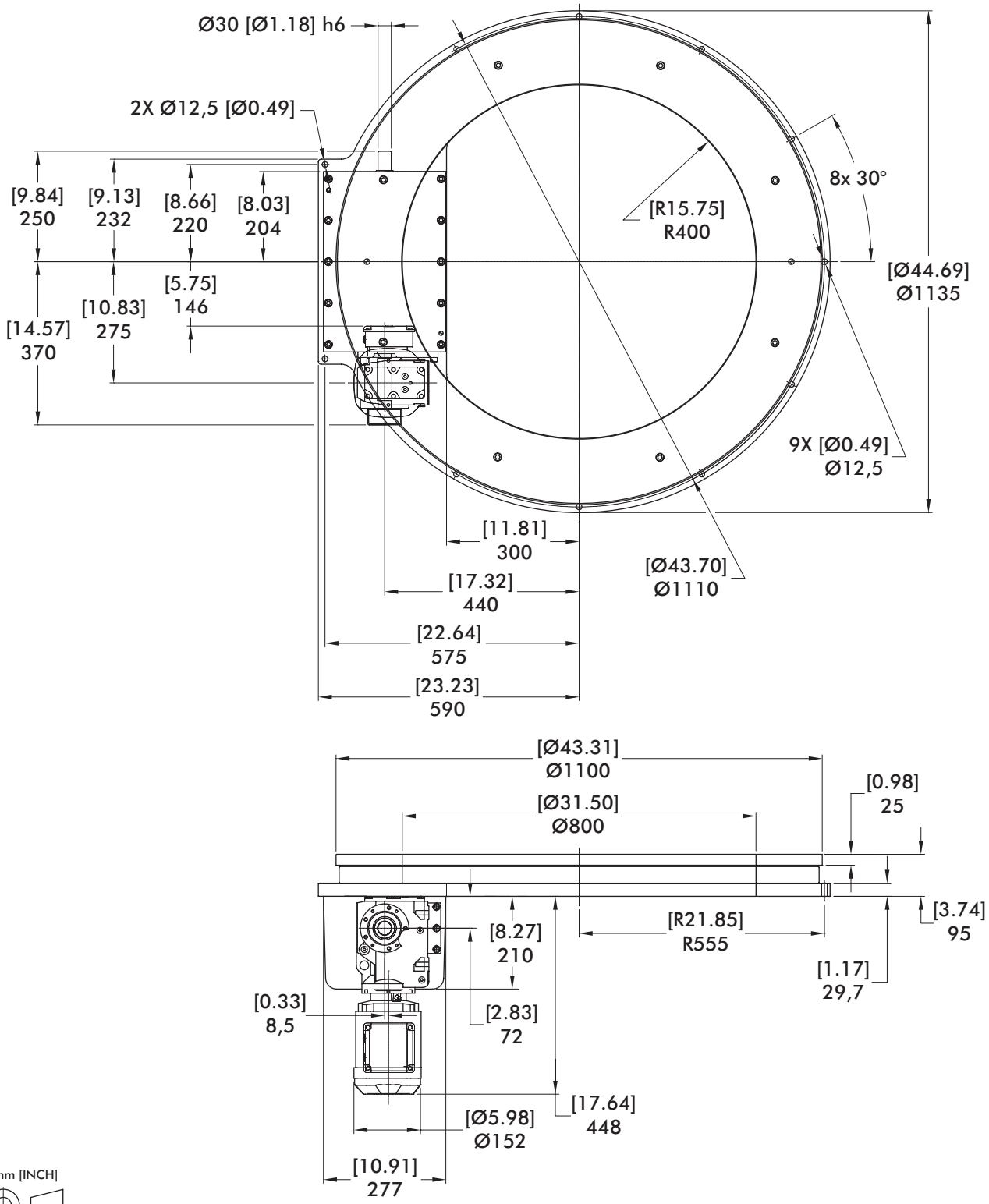

mm [INCH]

THIRD ANGLE PROJECTION

Dimensions and technical information are subject to change without notice

Maximum Inertia x 1000 kg-cm² [lb-in²] for standard package							
Stops	Motion Time [seconds]						
	0.915	1.359	1.521	1.791	2.072	2.217	2.557
6	164 [56]	1106 [378]	1454 [497]	2119 [724]	2923 [999]	3386 [1157]	4594 [1570]
8	497 [170]	2174 [743]	2792 [954]	3971 [1357]	5405 [1847]	6224 [2127]	8372 [2861]
12	1451 [496]	5221 [1784]	6614 [2260]	9262 [3165]	12490 [4268]	14336 [4899]	19168 [6550]
16	2783 [951]	9484 [3241]	11963 [4088]	16672 [5697]	22407 [7657]	25688 [8778]	34280 [11714]
Reducer Ratio							
	29.96	37.97	49.79	58.60	67.80	72.54	83.69

Features

- KH37 Reducer (Ratios from 29.96:1 to 83.69:1)
- 1 HP AC Drive Package with Inverter Duty Motor and IM-pAC AC Drive (up to 60 cpm)
- Double Extended Camshaft (Input Shaft)
- Center Thru Hole (Ø800 mm [Ø31.50 in])
- Cycle Cam and Limit Switch Mounted to Camshaft
- Right Hand Cam

Optional Accessories

- KH47 Reducer
- 2 HP AC Drive Package with Inverter Duty Motor and Commander SK AC Drive (up to 60 cpm)
- Dual Cam and Limit Switch
- Left Hand Cam
- AC brake Motor
- Aluminum dial ring
- Servo motor drive package with precision planetary reducer for applications requiring flexibility or fewer than 6 stations
- Custom dials & tooling plates
- Machined base (see pg. IN-MCH-84)

Output Bearing Capacity (loads carried during index):

Radial	159940 N [36350 lbs]
Axial	72829 N [16552 lbs]
Moment	16879 N-m [149376 in-lbs]

Accuracy ±35 arcsec / ±0,038 mm [±.0015 in] at 448 mm [17.65 in] Radius

Repeatability ±9 arcsec / ±0,010 mm [±.0004 in] at 448 mm [17.65 in] Radius

1550RNG SERIES

Ring Drive Dial Indexer | Dimensions

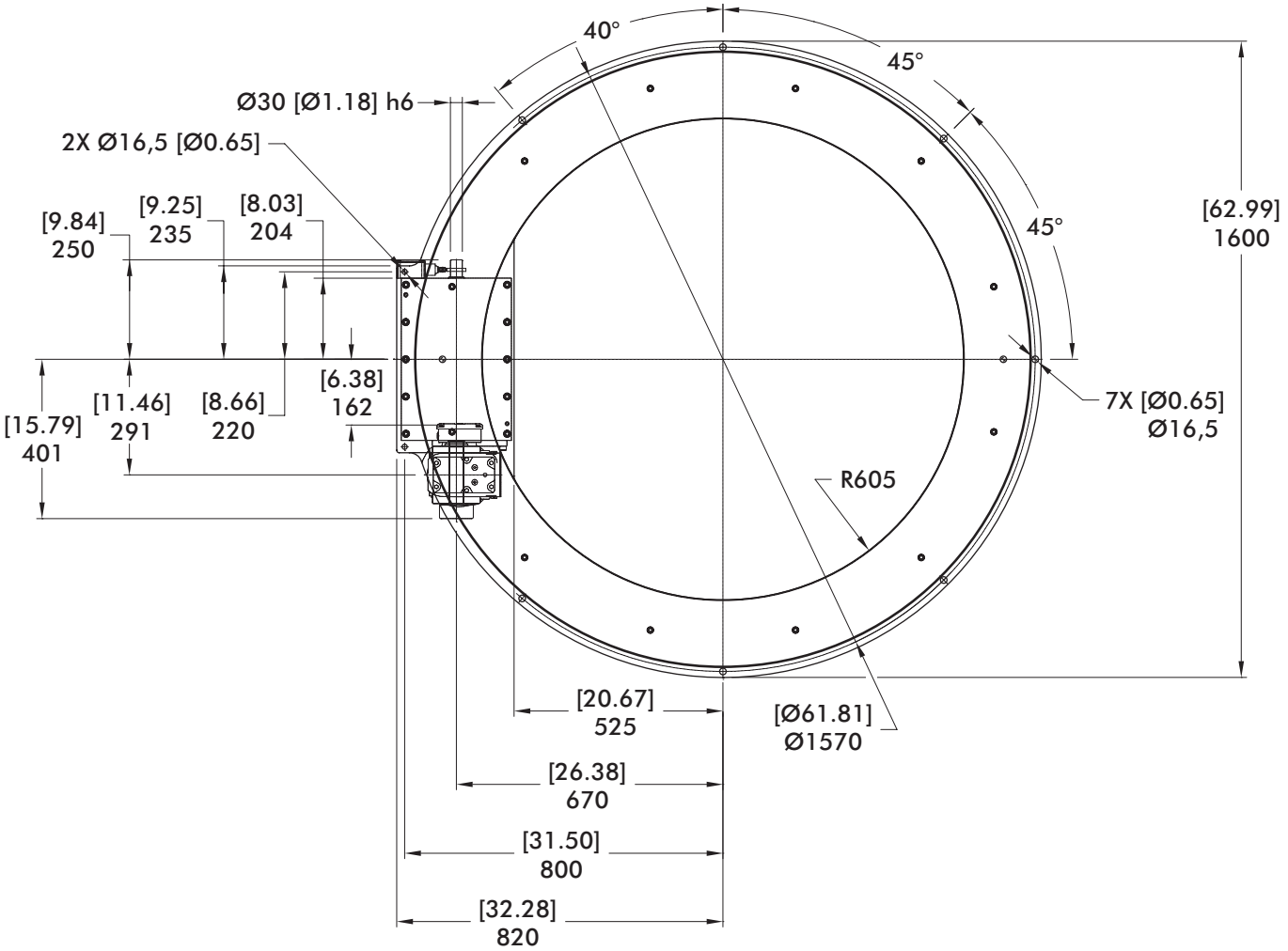

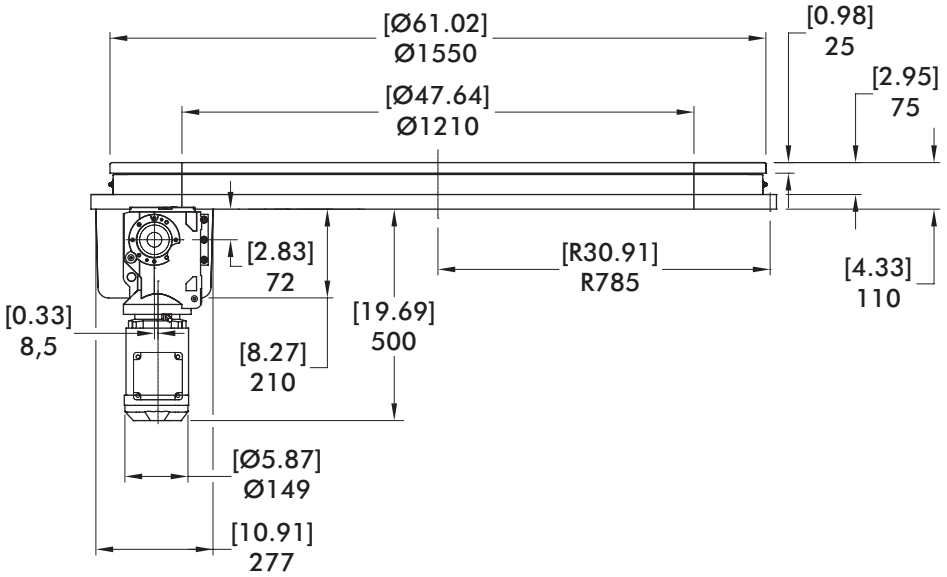

mm [INCH]

THIRD ANGLE PROJECTION

Dimensions and technical information are subject to change without notice

Maximum Inertia x 1000 kg-cm² [lb-in²] for standard package							
Stops	Motion Time [seconds]						
	1.210	1.496	1.934	2.134	2.298	2.601	2.776
6	679 [232]	2242 [766]	5063 [1730]	6380 [2180]	7556 [2582]	9964 [3405]	11495 [3928]
8	1984 [678]	4764 [1628]	9780 [3342]	12121 [4142]	14214 [4857]	18495 [6320]	21211 [7248]
12	5718 [1954]	11972 [4091]	23253 [7946]	28527 [9748]	33232 [11356]	42863 [14647]	48979 [16737]
16	10954 [3743]	22071 [7542]	42125 [14395]	51499 [17598]	59868 [20458]	76985 [26307]	87859 [30023]
Reducer Ratio							
	39.61	48.95	63.30	69.84	75.20	85.12	90.86

Features

- KH47 Reducer (Ratios from 39.61:1 to 90.866:1)
- 2 HP AC Drive Package with Inverter Duty Motor and IM-pAC AC Drive (up to 60 cpm)
- Double Extended Camshaft (Input Shaft)
- Center Thru Hole (Ø1210 mm [Ø47.64 in])
- Cycle Cam and Limit Switch Mounted to Camshaft
- Right Hand Cam

Optional Accessories

- Dual Cam and Limit Switch
- Left Hand Cam
- AC brake Motor
- Aluminum dial ring
- Servo motor drive package with precision planetary reducer for applications requiring flexibility or fewer than 6 stations
- Custom dials & tooling plates
- Machined base (see pg. IN-MCH-84)

Output Bearing Capacity (loads carried during index):

Radial	239052 N [54330 lbs]
Axial	76635 N [17417 lbs]
Moment	25720 N-m [227622 in-lbs]

Accuracy ±25 arcsec / ±0,039 mm [±.0015 in] at 648 mm [25.51 in] Radius

Repeatability ±6 arcsec / ±0,010 mm [±.0004 in] at 648 mm [25.51 in] Radius